TOWN OF LOS GATOS
#13-31 ALMOND GROVE STREET RECONSTRUCTION
PHASE 1 (CONCRETE)

CLIENT

110 East Main St.
Los Gatos, CA, 95030
(408) 354-6832

ENGINEER

NCE
501 Canal Blvd. Suite 1
Richmond, CA 94804
(510) 215-3620

LISA PETERSEN
TOWN ENGINEER

REGISTERED PROFESSIONAL ENGINEER — LISA M. PETERSEN — No. 46792 — Exp. 6/30/17 — CIVIL — STATE OF CALIFORNIA

DATE 1/6/2016

MATT MORLEY
PARKS & PUBLIC WORKS DIRECTOR

DATE 1/6/2016

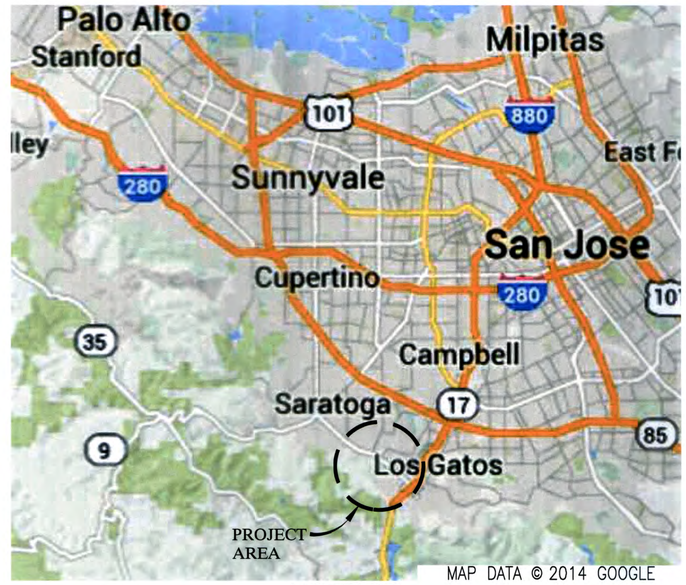

MAP DATA © 2014 GOOGLE

LOCATION MAP
NTS

VICINITY MAP
NTS

SHEET INDEX

DRAWING NO.	DESCRIPTION
G1	TITLE SHEET
G2	NOTES, LEGEND & ABBREVIATIONS
C1	BROADWAY "BR" 10+00 TO "BR" 21+00 DEMOLITION PLAN
C2	BACHMAN AVENUE "BA" 10+00 TO "BA" 20+00 DEMOLITION PLAN
C3	BACHMAN AVENUE "BA" 20+00 TO "BA" 24+00 DEMOLITION PLAN
C4	BROADWAY "BR" 10+00 TO "BR" 15+50 GRADING PLAN AND PROFILE
C5	BROADWAY "BR" 15+50 TO "BR" 21+00 GRADING PLAN AND PROFILE
C6	BACHMAN AVENUE "BA" 10+00 TO "BA" 15+00 GRADING PLAN AND PROFILE
C7	BACHMAN AVENUE "BA" 15+00 TO "BA" 20+00 GRADING PLAN AND PROFILE
C8	BACHMAN AVENUE "BA" 20+00 TO "BA" 24+00 GRADING PLAN AND PROFILE
C9	BROADWAY "BR" 10+00 TO "BR" 21+00 IMPROVEMENT PLAN
C10	BACHMAN AVENUE "BA" 10+00 TO "BA" 20+00 IMPROVEMENT PLAN
C11	BACHMAN AVENUE "BA" 20+00 TO "BA" 24+00 IMPROVEMENT PLAN
D1	DETAILS
D2	DETAILS
D3	DETAILS
D4	DETAILS
D5	DETAILS

SWPPP:
CONTRACTOR TO PROVIDE SWPPP, IMPLEMENTATION, MONITORING, AND REPORTING.

ISSUED FOR BID
DATE: 1-5-16

NCE
501 Canal Blvd. Suite 1
Richmond, California 94804
(510) 215-3620

REGISTERED PROFESSIONAL ENGINEER — FRANC G. HATTON — No. C 64725 — Exp. 06/30/17 — CIVIL — STATE OF CALIFORNIA

1/05/2016

#13-31 ALMOND GROVE STREET RECONSTRUCTION PHASE 1 (CONCRETE)

OWNER

TOWN OF LOS GATOS
110 EAST MAIN ST.
LOS GATOS, CA 95030

NO.	DATE	DESCRIPTION

PROJECT NO:	58.13.20
DESIGNED BY:	SEH
DRAWN BY:	SPT, JEH
CHECKED BY: JWN	DATE 12/28/15
DATE:	1/05/2016

This drawing is the property of NCE, including all patented and patentable features, and/or confidential information and its use is conditioned upon the user's agreement not to reproduce the drawing, in whole or part, nor the material described thereon, nor the use of the drawing for any purpose other than specifically permitted in writing by NCE.

SHEET TITLE

TITLE SHEET

DRAWING

G1

SHEET 1 OF 18

File: P:\Active Projects\Los Gatos Town - SR\58.13.20 - Almond Grove District Street Reconstruction Project\CAD\Dwg\Sheets\G1 Title PCC.dwg | Layout: G-1 TITLE | Plotted Jan 05, 2016 @ 4:22pm | 8.57.20.0b (LMS Tech)

GENERAL NOTES

1. QUALITY CONTROL MONITORING OF SUBGRADE BACKFILL AND EMBANKMENT MATERIALS AND CONSTRUCTION SHALL BE BY A GEOTECHNICAL FIRM APPROVED BY THE TOWN AND SECURED AND PAID FOR BY THE CONTRACTOR.
2. ALL IMPROVEMENTS SHALL MEET CURRENT ADAAG STANDARDS.
3. ALL CONTRACTORS ARE RESPONSIBLE FOR VERIFICATION OF ALL EXISTING UTILITIES IN FIELD. CALL UNDERGROUND SERVICE ALERT (USA) 1-800-227-2600 BEFORE STARTING ANY EXCAVATIONS. IT IS THE SOLE RESPONSIBILITY OF THE CONTRACTOR TO VERIFY EXISTENCE OF AND PROTECT ALL EXISTING UTILITIES. ANY DAMAGE TO AN EXISTING UTILITY WILL BE REPAIRED AT THE EXPENSE OF THE CONTRACTOR.
4. IT IS THE RESPONSIBILITY OF THE CONTRACTOR TO PROTECT ANY EXISTING UTILITY BOXES. ANY CRACKED OR BROKEN BOXES SHALL BE BROUGHT TO THE ATTENTION OF THE TOWN INSPECTOR PRIOR TO ANY WORK AND REPLACED.
5. PEDESTRIAN AND VEHICULAR ACCESS SHALL BE MAINTAINED AT ALL TIMES UNLESS AUTHORIZED BY THE TOWN ENGINEER.
6. GRADING OF SUBGRADE SHALL BE ACCOMPLISHED BY POWER GRADER OF SUITABLE SIZE AND BY HAND SHOVELING AND RAKING AS REQUIRED TO PRODUCE A NEAT AND SMOOTH UNIFORM SURFACE.
7. THE SUBGRADE SHALL BE COMPACTED PRIOR TO PLACEMENT OF AGGREGATE BASE. THE SUBGRADE SHALL BE COMPACTED WITH ROLLERS, MECHANICAL TAMPERS, OR OTHER SUITABLE EQUIPMENT UNTIL A 95% MAXIMUM DENSITY COMPACTION IS ATTAINED. (ASTM D1557) WHERE REQUIRED BY THE TOWN, THE EXISTING SUBGRADE MATERIAL SHALL BE REMOVED AND REPLACED WITH AGGREGATE BASE. BASE MATERIAL SHALL BE PLACED TO THE DEPTH REQUIRED BY THE TOWN AND SHALL BE MECHANICALLY COMPACTED TO 95 PERCENT OF MAXIMUM DRY DENSITY (ASTM D1557). SPECIAL CARE MUST BE TAKEN DURING THE COMPACTION AND TESTING TO TO PREVENT DAMAGES TO THE UTILITY LINES.
8. A PRE-JOB MEETING SHALL BE HELD WITH THE ENGINEERING INSPECTOR FROM THE TOWN OF LOS GATOS DEPARTMENT OF PARKS AND PUBLIC WORKS PRIOR TO ANY WORK BEING DONE.
9. ALL FILLS SHALL BE CONSTRUCTED IN LOOSE LIFTS (8-10') AND COMPACTED TO 90% RELATIVE COMPACTION, UNLESS OTHERWISE DIRECTED BY THE TOWN ENGINEER.
10. SLOPES TO RECEIVE FILLS SHALL BE STRIPPED AND KEYED INTO HILLSIDE SLOPE OR BENCHED PRIOR OF RECEIVING FILLS.
11. ALL EXCESS SOIL SHALL BE OFF-HAULED TO AN APPROVED SITE.
12. ALL CUT AND FILL SLOPES SHALL BE PROPERLY MAINTAINED UNTIL EFFECTIVE EROSION CONTROL HAS BEEN ESTABLISHED TO THE APPROVAL OF THE TOWN ENGINEER.
13. A STORM WATER POLLUTION PREVENTION PLAN (SWPPP) MUST BE PREPARED BY A QUALIFIED SWPPP DEVELOPER (QSD) TO BE SUBMITTED AND APPROVED BY THE ENGINEER PRIOR TO THE START OF CONSTRUCTION IN ACCORDANCE WITH SECTION 13, "WATER POLLUTION CONTROL", OF THE CURRENT CALTRANS STANDARD SPECIFICATIONS AND THE PROJECT SPECIAL PROVISIONS.
14. ALL CATCH BASINS AT THE PROJECT SITE, AND WHICH ARE DETERMINED BY THE ENGINEER TO HAVE BEEN AFFECTED BY THE CONSTRUCTION, SHALL BE CLEANED OUT BY THE CONTRACTOR AT THE END OF THE PROJECT.
15. EROSION CONTROL MEASURES (BMP'S) SHALL BE INSTALLED AT THE CUT AND FILL SLOPES RESULTING FROM THE EXCAVATION AND GRADING OPERATIONS. THE CONTRACTOR SHALL INSTALL EROSION CONTROL BLANKETS, WATTLES, SILT FENCES, AND OTHER MEASURES AS REQUIRED ACCORDING TO THE CALTRANS CONSTRUCTION SITE BEST MANAGEMENT PRACTICES (BMP'S) MANUAL AND AS OUTLINED IN THE SWPPP.
16. A DETAILED TRAFFIC CONTROL PLAN MUST BE SUBMITTED AND APPROVED BY THE ENGINEER PRIOR TO THE START OF CONSTRUCTION IN ACCORDANCE WITH SECTION 12, "TEMPORARY TRAFFIC CONTROL", OF THE CURRENT CALTRANS STANDARD SPECIFICATIONS AND THE PROJECT TECHNICAL SPECIFICATIONS. THE TRAFFIC CONTROL PLAN MUST BE PREPARED BY A PROFESSIONAL TRAFFIC OPERATIONS ENGINEER (PTOE) OR A TRAFFIC CONTROL SUPERVISOR (TCS) CERTIFIED BY THE AMERICAN TRAFFIC SAFETY SERVICES ASSOCIATION (ATSSA), CONFORMING TO THE LATEST EDITION OF THE MANUAL ON UNIFORM TRAFFIC CONTROL DEVICES (MUTCD).
17. THE CONTRACTOR SHALL INSTALL AND MAINTAIN NECESSARY TEMPORARY PEDESTRIAN AND SAFETY CONTROL DEVICES.
18. THE CONTRACTOR SHALL SCHEDULE CONSTRUCTION ACTIVITIES TO MINIMIZE INCONVENIENCE TO RESIDENTS AND BUSINESSES. RESIDENTS AND BUSINESSES SHALL BE NOTIFIED PER THE TOWN'S STANDARD SPECIFICATIONS. MAINTAIN ONE VEHICULAR OR PEDESTRIAN ACCESS TO BUSINESSES/RESIDENCES AT ALL TIMES.

TYPICAL IMPROVEMENT NOTE

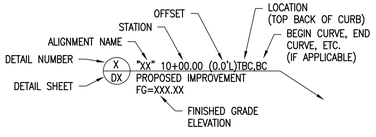

ABBREVIATIONS

AASHTO	AMERICAN ASSOCIATION OF STATE HIGHWAY AND TRANSPORTATION OFFICIALS
AC	ASPHALT CONCRETE
ADAAG	AMERICANS WITH DISABILITIES ACT ACCESSIBILITY GUIDELINES
APN	ASSESSOR PARCEL NUMBER
ASCE	AMERICAN SOCIETY OF CIVIL ENGINEERS
ASTM	AMERICAN SOCIETY FOR TESTING AND MATERIALS
AVE	AVENUE
AWG	AMERICAN WIRE GAUGE
"BA"	BACHMAN AVENUE ALIGNMENT
BC	BEGIN CURVE
BLVD.	BOULEVARD
"BR"	BROADWAY ALIGNMENT
BVCE	BEGIN VERTICAL CURVE ELEVATION
BVCS	BEGIN VERTICAL CURVE STATION
BW	BACK OF WALK
CALTRANS	CALIFORNIA DEPARTMENT OF TRANSPORTATION
C/C	CENTER TO CENTER
C&G	CURB AND GUTTER
CMP	CORRUGATED METAL PIPE
CONC.	CONCRETE
DG	DECOMPOSED GRANITE
DIA	DIAMETER
DLC	DETECTOR LEAD-IN CABLE
DR.	DRIVE
D/W	DRIVEWAY
E	EAST, EASTING
(E), EX.	EXISTING
EB	EAST BOUND
EC	END CURVE
EG	EXISTING GRADE
ELEV	ELEVATION
EP	EDGE OF PAVEMENT
EQ	EQUAL
ETC.	ET CETERA
EVCE	END VERTICAL CURVE ELEVATION
EVCS	END VERTICAL CURVE STATION
FG	FINISH GRADE
FT	FEET
HARN	HIGH ACCURACY REFERENCE NETWORK
IE	INVERT ELEVATION
IN	INCH
HMAC	HOT MIX ASPHALT CONCRETE
LBS.	POUNDS
LF	LINEAR FEET
LN.	LANE
LT,L	LEFT
LVC	LENGTH OF VERTICAL CURVE
MAX	MAXIMUM
MDD	MAXIMUM DRY DENSITY
MH	MANHOLE
MIN	MINIMUM
MPH	MILES PER HOUR
MUTCD	MANUAL ON UNIFORM TRAFFIC CONTROL DEVICES
N	NORTH, NORTHING
(N)	NEW
NAD	NORTH AMERICAN DATUM
NAVD	NORTH AMERICAN VERTICAL DATUM
NB	NORTHBOUND
NEC	NATIONAL ELECTRICAL CODE
NESC	NATIONAL ELECTRICAL SAFETY CODE
NIC	NOT IN CONTRACT
NO.	NUMBER
NTS	NOT TO SCALE
O.C.	ON CENTER
O.D.	OUTSIDE DIAMETER
O.S.H.A.	OCCUPATIONAL SAFETY AND HEALTH ADMINISTRATION
PC	POINT OF CURVE
PCC	PORTLAND CEMENT CONCRETE
PCCP	PORTLAND CEMENT CONCRETE ROADWAY PAVEMENT
PED	PEDESTRIAN
PI	POINT OF INTERSECTION
PRC	POINT OF REVERSE CURVE
PSI	POUNDS PER SQUARE INCH
PT	POINT OF TANGENCY
PVC	POLYVINYL CHLORIDE
PVI	POINT OF VERTICAL INTERSECTION
R	RADIUS
RD	ROAD
ROW	RIGHT OF WAY
RT,R	RIGHT
S	SOUTH
SB	SOUTHBOUND
SD	STORM DRAIN
SDMH	STORM DRAIN MANHOLE
SDR	STANDARD DIMENSION RATIO
SF	SQUARE FEET
SQ	SQUARE
ST.	STREET
STA	STATION
SS	SANITARY SEWER
SSMH	SANITARY SEWER MANHOLE
STD	STANDARD
SY	SQUARE YARDS
S/W	SIDEWALK
T	THICKNESS
TBC	TOP BACK OF CURB
TYP	TYPICAL
WB	WEST BOUND
W/	WITH
WWM	WELDED WIRE MESH

SURVEY CONTROL

HORIZONTAL AND VERTICAL CONTROL IS BASED ON THE FOLLOWING SURVEY CONTROL MONUMENTS ESTABLISHED BY THE TOWN OF LOS GATOS.

POINT	NORTHING	EASTING	ELEVATION	DESCRIPTION
LG32	1909555.8378	6130100.7106	401.02	SET BRASS DISK IN MONUMENT WELL STAMPED "LG#32"
LG33	1908361.8090	6127152.5839	563.56	SET BRASS DISK IN MONUMENT WELL STAMPED "LG#33"
LG34	1907423.9497	6129324.5290	418.37	SET BRASS DISK IN MONUMENT WELL STAMPED "LG#34"

LEGEND

EXISTING

- 400 — MAJOR CONTOUR
- MINOR CONTOUR
- ROW/PROPERTY LINE
- BRICK/PAVERS
- BUILDING LINE
- CENTERLINE
- CONCRETE
- CURB & GUTTER
- FENCELINE – WOOD
- FENCELINE – CHAIN LINK
- FENCELINE – IRON
- GAS — GAS
- OHU — OVERHEAD UTILITY
- E — UNDERGROUND ELECTRIC
- SS — SANITARY SEWER
- SD — STORM DRAIN
- WALL LINE
- W — WATER
- SOFTSCAPE (GRASS)
- HARDSCAPE (BRICK/PAVERS)
- arv — AIR RELEASE VALVE
- AREA DRAIN
- ctv — CABLE UTILITY BOX
- C1-1 — CORE LOCATION AND NUMBER
- DRAIN INLET
- ebx — ELECTRIC UTILITY BOX
- ELECTROLIER
- UTILITY POLE
- fdc — FIRE DEPARTMENT CONNECTION
- FIRE HYDRANT
- gv — GAS METER
- gm — GAS VALVE
- hcr — HANDICAP ACCESSIBLE RAMP
- icv — IRRIGATION CONTROL VALVE
- sco — SANITARY SEWER CLEANOUT
- SEWER MANHOLE
- SIGN
- SITE LIGHT
- STORM DRAIN MANHOLE
- slb — STREET LIGHT UTILITY BOX
- TEMPORARY CONTROL POINT
- 8"1 — TREE TRUNK LOCATION AND SIZE
- tw — TREE WELL
- UTILITY MANHOLE – TYPE UNKNOWN
- brw — WALL – BRICK
- cw — WALL – CONCRETE
- rkw — WALL – ROCK
- wdw — WALL – WOOD
- wm — WATER METER
- wv — WATER VALVE

PROPOSED

- 400 — MAJOR CONTOUR
- MINOR CONTOUR
- CONCRETE / SIDEWALK
- SAWCUT EX DRIVEWAY
- CURB AND GUTTER
- PCC PAVEMENT JOINTING PATTERN
- REINFORCED PCC PAVEMENT
- ASPHALT TRANSITION
- SIDEWALK
- PLANTER
- VILLA HERMOSA SIDEWALK
- PAVER DRIVEWAY CONFORM
- ASPHALT DRIVEWAY CONFORM
- PCC DRIVEWAY CONFORM
- DRIVEWAY
- PEDESTRIAN RAMP
- CATCH BASIN/CURB INLET
- STAIRS
- PAVEMENT DEMOLITION
- CURB & GUTTER DEMOLITION
- HARDSCAPE DEMOLITION
- SIDEWALK & DRIVEWAY DEMOLITION
- TREE REMOVAL
- TREE

CORE SUMMARY TABLE

STREET NAME	CORE NO.	PCC THICKNESS (IN)	AB THICKNESS (IN)	LOCATION
BACHMAN AVENUE	C 1-1	4.625	NONE	"BA" 21+94.88 (5.65'L)
	C 1-2	4.75	NONE	"BA" 18+88.11 (7.47'R)
	C 1-3	4.125	NONE	"BA" 14+36.70 (4.12'R)
	C 1-4	4.875	NONE	"BA" 12+50.40 (9.44'R)
BROADWAY	C 2-1	5.125	NONE	"BR" 18+29.28 (6.89'L)
	C 2-2	5.25	NONE	"BR" 14+16.20 (4.96'L)
	C 2-3	5.125	NONE	"BR" 11+55.98 (4.01'R)

ISSUED FOR BID
DATE: 1-5-16

NCE
501 Canal Blvd. Suite 1
Richmond, California 94804
(510) 215-3620

REGISTERED PROFESSIONAL ENGINEER
FRANZ G. MAUTNER
NO. C 64725
EXP. 06/30/17
CIVIL
STATE OF CALIFORNIA
1/05/2016

#13-31 ALMOND GROVE STREET RECONSTRUCTION PHASE 1 (CONCRETE)

OWNER

TOWN OF LOS GATOS
110 EAST MAIN ST.
LOS GATOS, CA 95030

NO.	DATE	DESCRIPTION

PROJECT NO:	58.13.20
DESIGNED BY:	SEH
DRAWN BY:	SPT, JEH
CHECKED BY: JWN	DATE 12/28/15
DATE:	1/05/2016

This drawing is the property of NCE, including all patented and patentable features, and/or confidential information and its use is conditioned upon the user's agreement not to reproduce the drawing, in whole or part, nor the material described thereon, nor the use of the drawing for any purpose other than specifically permitted in writing by NCE.

SHEET TITLE

NOTES, LEGEND, & ABBREVIATIONS

DRAWING

G2

File: P:\Active Projects\Los Gatos Town - 58.13.20 - Almond Grove District Street Reconstruction Project\CAD\dwg\Sheets\G1 Title PCC.dwg | Layout: G-2 N.A | Printed Jan 05, 2016 @ 5:31pm | 15:57:20.0s (LMS Tech)

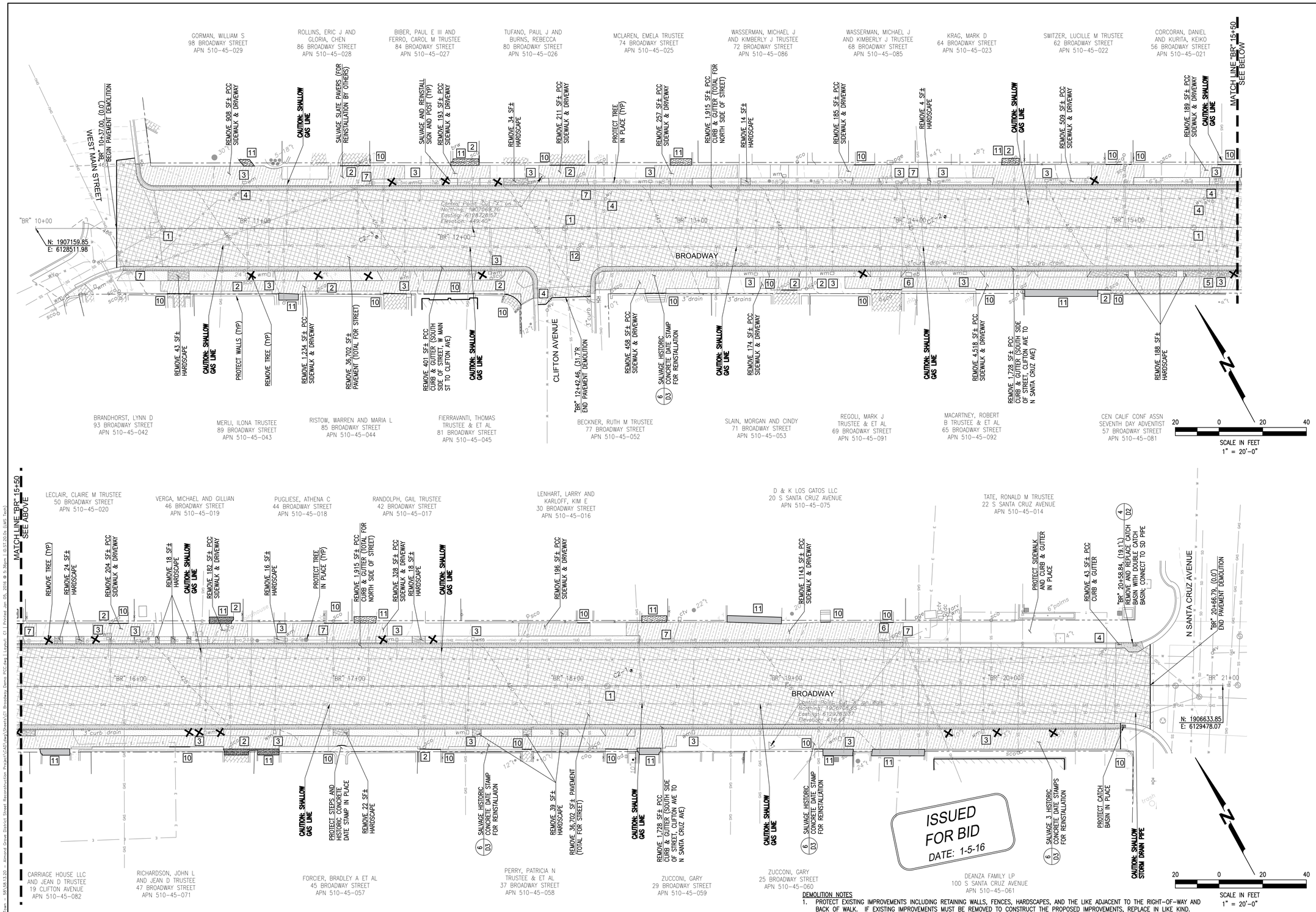

DEMOLITION KEYNOTES:

1. SANITARY SEWER MANHOLE; ADJUST TO FINISH GRADE. (5/D2)
2. SANITARY SEWER CLEANOUT; ADJUST TO FINISH GRADE. (5/D2)
3. WATER METER BOX; REMOVE AND REPLACE. (5/D2)
4. WATER VALVE BOX; REMOVE AND REPLACE. (5/D2)
5. FIRE HYDRANT; PROTECT IN PLACE.
6. ELECTRICAL BOX; ADJUST TO FINISH GRADE. (5/D2)
7. POWER POLE; PROTECT IN PLACE.
8. CABLE BOX; ADJUST TO FINISH GRADE. (5/D2)
9. STORM DRAIN MANHOLE; ADJUST TO FINISH GRADE. (5/D2)
10. SAWCUT AND PROTECT WALKWAY OR DRIVEWAY IMPROVEMENTS.
11. 3' WALKWAY OR DRIVEWAY CONFORM; REMOVE AND REPLACE IN LIKE KIND.
12. GAS VALVE BOX; REMOVE AND REPLACE (5/D2)

DEMOLITION NOTES

1. PROTECT EXISTING IMPROVEMENTS INCLUDING RETAINING WALLS, FENCES, HARDSCAPES, AND THE LIKE ADJACENT TO THE RIGHT-OF-WAY AND BACK OF WALK. IF EXISTING IMPROVEMENTS MUST BE REMOVED TO CONSTRUCT THE PROPOSED IMPROVEMENTS, REPLACE IN LIKE KIND.
2. PROTECT EXISTING SIGNAGE. IF EXISTING SIGNS AND SIGN POSTS MUST BE REMOVED TO CONSTRUCT THE PROPOSED IMPROVEMENTS, STORE AND REINSTALL OR REPLACE IN KIND. CONTRACTOR SHALL INVENTORY EXISTING SIGN LOCATIONS PRIOR TO CONSTRUCTION.
3. CONTRACTOR SHALL INVENTORY EXISTING PAVEMENT MARKING LOCATIONS PRIOR TO CONSTRUCTION.
4. SHALLOW UTILITIES ARE EXPECTED. UTILITIES ARE SHOWN IN THEIR APPROXIMATE LOCATION. CONTRACTOR SHALL VERIFY LOCATION AND DEPTH AND COORDINATE WITH UTILITY OWNERS TO DETERMINE IF RELOCATION IS REQUIRED.
5. CONTRACTOR SHALL PROTECT IN PLACE EXISTING HARDSCAPES IN PARKSTRIPS TO THE EXTENT POSSIBLE. BRICKS IN DRIVEWAYS AND PARKSTRIPS THAT MUST BE REMOVED SHALL BE PROTECTED, SALVAGED AND STORED AT HOMEOWNER'S REQUEST. CONTRACTOR SHALL COORDINATE WITH PROPERTY OWNERS ON SALVAGE AND STORAGE LOCATION ON PRIVATE PROPERTY.
6. AT DRIVEWAY AND WALKWAY CONFORMS, REMOVE AND REPLACE HARDSCAPE IN LIKE KIND. NOMINAL WIDTH OF CONFORMS SHALL BE 3 FEET.
7. UTILITY FEATURES OUTSIDE THE LIMITS OF WORK SHALL BE PROTECTED.

Know what's below. Call before you dig.

NCE
501 Canal Blvd. Suite 1
Richmond, California 94804
(510) 215-3620

REGISTERED PROFESSIONAL ENGINEER FRANZ G. HALDIMANN No. C 64725 EXP. 06/30/17 CIVIL STATE OF CALIFORNIA

1/05/2016

#13-31 ALMOND GROVE STREET RECONSTRUCTION PHASE 1 (CONCRETE)

OWNER

TOWN OF LOS GATOS
110 EAST MAIN ST.
LOS GATOS, CA 95030

NO.	DATE	DESCRIPTION

PROJECT NO:	58.13.20
DESIGNED BY:	SEH
DRAWN BY:	SPT, JEH
CHECKED BY: JWN	DATE 12/28/15
DATE:	1/05/2016

This drawing is the property of NCE, including all patented and patentable features, and/or confidential information and its use is conditioned upon the user's agreement not to reproduce the drawing, in whole or part, nor the material described thereon, nor the use of the drawing for any purpose other than specifically permitted in writing by NCE.

SHEET TITLE

BROADWAY
"BR" 10+00 TO "BR" 21+00
DEMOLITION PLAN

DRAWING

C1

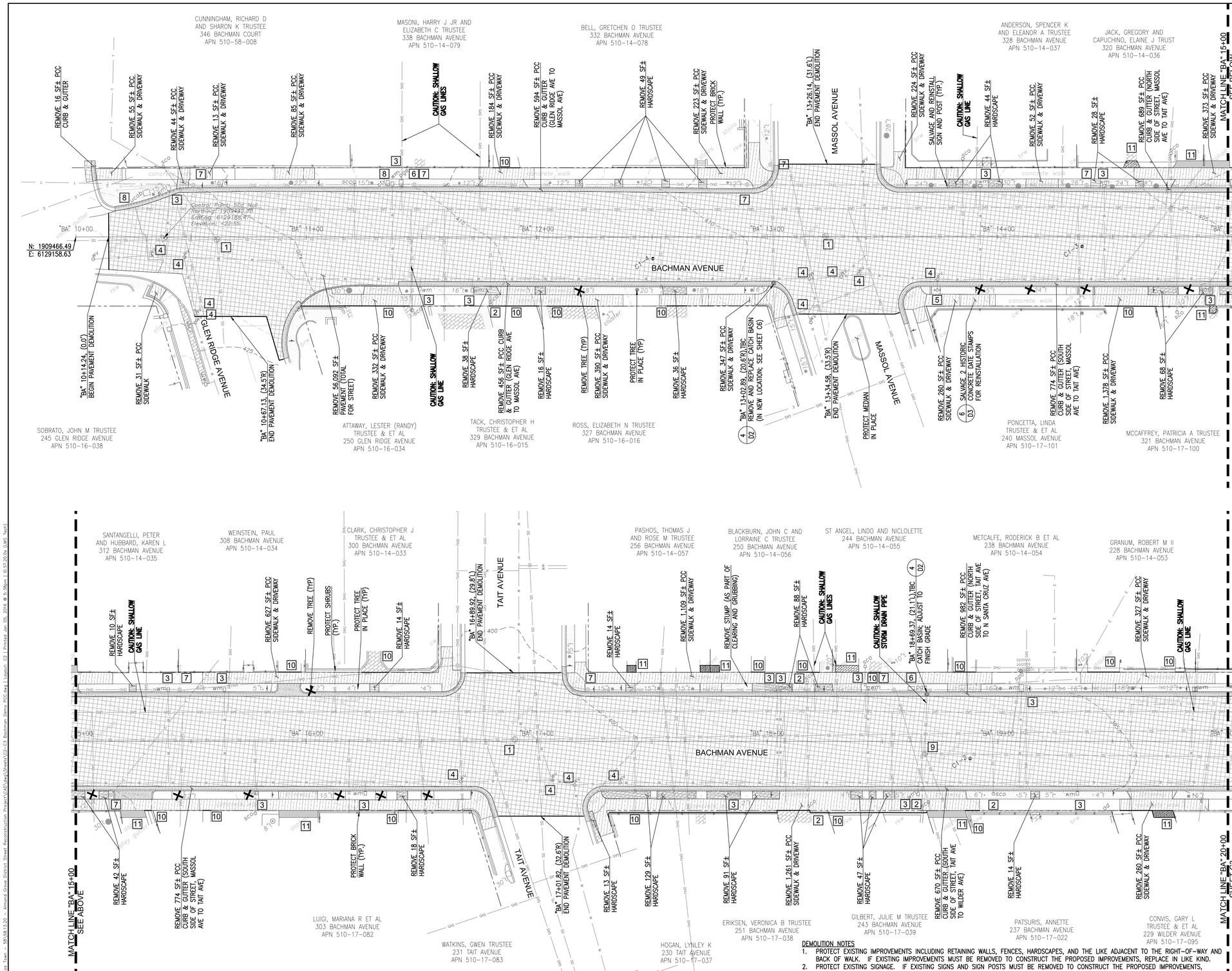

DEMOLITION KEYNOTES:

1. SANITARY SEWER MANHOLE; ADJUST TO FINISH GRADE. (5/D2)
2. SANITARY SEWER CLEANOUT; ADJUST TO FINISH GRADE. (5/D2)
3. WATER METER BOX; REMOVE AND REPLACE. (5/D2)
4. WATER VALVE BOX; REMOVE AND REPLACE. (5/D2)
5. FIRE HYDRANT; PROTECT IN PLACE.
6. ELECTRICAL BOX; ADJUST TO FINISH GRADE. (5/D2)
7. POWER POLE; PROTECT IN PLACE.
8. CABLE BOX; ADJUST TO FINISH GRADE. (5/D2)
9. STORM DRAIN MANHOLE; ADJUST TO FINISH GRADE. (5/D2)
10. SAWCUT AND PROTECT WALKWAY OR DRIVEWAY IMPROVEMENTS.
11. 3' WALKWAY OR DRIVEWAY CONFORM; REMOVE AND REPLACE IN LIKE KIND.
12. GAS VALVE BOX; REMOVE AND REPLACE (5/D2)

DEMOLITION NOTES

1. PROTECT EXISTING IMPROVEMENTS INCLUDING RETAINING WALLS, FENCES, HARDSCAPES, AND THE LIKE ADJACENT TO THE RIGHT-OF-WAY AND BACK OF WALK. IF EXISTING IMPROVEMENTS MUST BE REMOVED TO CONSTRUCT THE PROPOSED IMPROVEMENTS, REPLACE IN LIKE KIND.
2. PROTECT EXISTING SIGNAGE. IF EXISTING SIGNS AND SIGN POSTS MUST BE REMOVED TO CONSTRUCT THE PROPOSED IMPROVEMENTS, STORE AND REINSTALL OR REPLACE IN KIND. CONTRACTOR SHALL INVENTORY EXISTING SIGN LOCATIONS PRIOR TO CONSTRUCTION.
3. CONTRACTOR SHALL INVENTORY EXISTING PAVEMENT MARKING LOCATIONS PRIOR TO CONSTRUCTION.
4. SHALLOW UTILITIES ARE EXPECTED. UTILITIES ARE SHOWN IN THEIR APPROXIMATE LOCATION. CONTRACTOR SHALL VERIFY LOCATION AND DEPTH AND COORDINATE WITH UTILITY OWNERS TO DETERMINE IF RELOCATION IS REQUIRED.
5. CONTRACTOR SHALL PROTECT IN PLACE EXISTING HARDSCAPES IN PARKSTRIPS TO THE EXTENT POSSIBLE. BRICKS IN DRIVEWAYS AND PARKSTRIPS THAT MUST BE REMOVED SHALL BE PROTECTED, SALVAGED AND STORED AT HOMEOWNER'S REQUEST. CONTRACTOR SHALL COORDINATE WITH PROPERTY OWNERS ON SALVAGE AND STORAGE LOCATION ON PRIVATE PROPERTY.
6. AT DRIVEWAY AND WALKWAY CONFORMS, REMOVE AND REPLACE HARDSCAPE IN LIKE KIND. NOMINAL WIDTH OF CONFORMS SHALL BE 3 FEET.
7. UTILITY FEATURES OUTSIDE THE LIMITS OF WORK SHALL BE PROTECTED.

ISSUED FOR BID
DATE: 1-5-16

Know what's below. Call before you dig.

NCE
501 Canal Blvd. Suite 1
Richmond, California 94804
(510) 215-3620

REGISTERED PROFESSIONAL ENGINEER FRANZ G. HAUTZINGER No. C 64725 EXP. 06/30/17 CIVIL STATE OF CALIFORNIA

1/05/2016

#13-31 ALMOND GROVE STREET RECONSTRUCTION PHASE 1 (CONCRETE)

OWNER

TOWN OF LOS GATOS
110 EAST MAIN ST.
LOS GATOS, CA 95030

NO.	DATE	DESCRIPTION

PROJECT NO:	58.13.20
DESIGNED BY:	SEH
DRAWN BY:	SPT, JEH
CHECKED BY: JWN	DATE 12/28/15
DATE:	1/05/2016

This drawing is the property of NCE, including all patented and patentable features, and/or confidential information and its use is conditioned upon the user's agreement not to reproduce the drawing, in whole or part, nor the material described thereon, nor the use of the drawing for any purpose other than specifically permitted in writing by NCE.

SHEET TITLE

BACHMAN AVENUE
"BA" 10+00 TO "BA" 20+00
DEMOLITION PLAN

DRAWING

C2

SHEET 4 OF 18

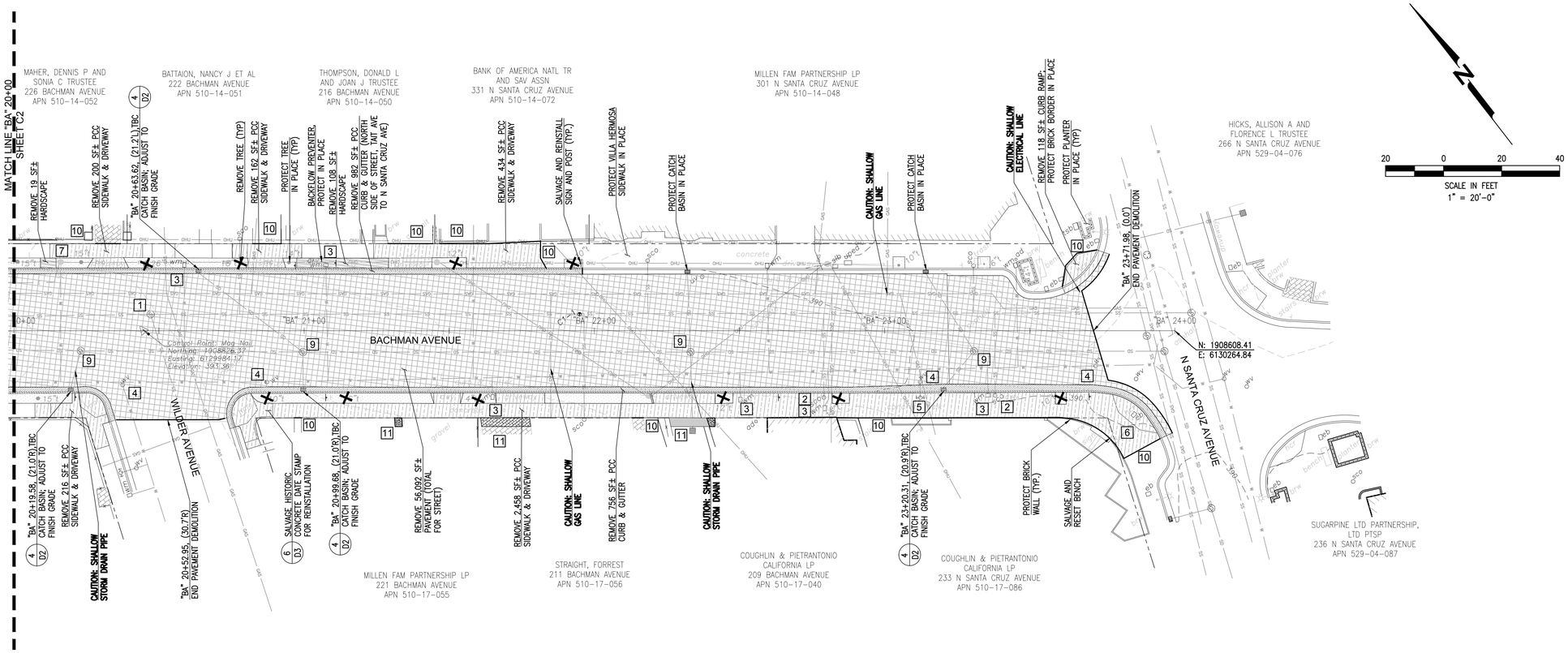

DEMOLITION KEYNOTES:

1. SANITARY SEWER MANHOLE; ADJUST TO FINISH GRADE. (5/D2)
2. SANITARY SEWER CLEANOUT; ADJUST TO FINISH GRADE. (5/D2)
3. WATER METER BOX; REMOVE AND REPLACE. (5/D2)
4. WATER VALVE BOX; REMOVE AND REPLACE. (5/D2)
5. FIRE HYDRANT; PROTECT IN PLACE.
6. ELECTRICAL BOX; ADJUST TO FINISH GRADE. (5/D2)
7. POWER POLE; PROTECT IN PLACE.
8. CABLE BOX; ADJUST TO FINISH GRADE. (5/D2)
9. STORM DRAIN MANHOLE; ADJUST TO FINISH GRADE. (5/D2)
10. SAWCUT AND PROTECT WALKWAY OR DRIVEWAY IMPROVEMENTS.
11. 3' WALKWAY OR DRIVEWAY CONFORM; REMOVE AND REPLACE IN LIKE KIND.
12. GAS VALVE BOX; REMOVE AND REPLACE (5/D2)

DEMOLITION NOTES

1. PROTECT EXISTING IMPROVEMENTS INCLUDING RETAINING WALLS, FENCES, HARDSCAPES, AND THE LIKE ADJACENT TO THE RIGHT-OF-WAY AND BACK OF WALK. IF EXISTING IMPROVEMENTS MUST BE REMOVED TO CONSTRUCT THE PROPOSED IMPROVEMENTS, REPLACE IN LIKE KIND.
2. PROTECT EXISTING SIGNAGE. IF EXISTING SIGNS AND SIGN POSTS MUST BE REMOVED TO CONSTRUCT THE PROPOSED IMPROVEMENTS, STORE AND REINSTALL OR REPLACE IN KIND. CONTRACTOR SHALL INVENTORY EXISTING SIGN LOCATIONS PRIOR TO CONSTRUCTION.
3. CONTRACTOR SHALL INVENTORY EXISTING PAVEMENT MARKING LOCATIONS PRIOR TO CONSTRUCTION.
4. SHALLOW UTILITIES ARE EXPECTED. UTILITIES ARE SHOWN IN THEIR APPROXIMATE LOCATION. CONTRACTOR SHALL VERIFY LOCATION AND DEPTH AND COORDINATE WITH UTILITY OWNERS TO DETERMINE IF RELOCATION IS REQUIRED.
5. CONTRACTOR SHALL PROTECT IN PLACE EXISTING HARDSCAPES IN PARKSTRIPS TO THE EXTENT POSSIBLE. BRICKS IN DRIVEWAYS AND PARKSTRIPS THAT MUST BE REMOVED SHALL BE PROTECTED, SALVAGED AND STORED AT HOMEOWNER'S REQUEST. CONTRACTOR SHALL COORDINATE WITH PROPERTY OWNERS ON SALVAGE AND STORAGE LOCATION ON PRIVATE PROPERTY.
6. AT DRIVEWAY AND WALKWAY CONFORMS, REMOVE AND REPLACE HARDSCAPE IN LIKE KIND. NOMINAL WIDTH OF CONFORMS SHALL BE 3 FEET.
7. UTILITY FEATURES OUTSIDE THE LIMITS OF WORK SHALL BE PROTECTED.

ISSUED FOR BID
DATE: 1-5-16

811 Know what's below. Call before you dig.

NCE
501 Canal Blvd. Suite 1
Richmond, California 94804
(510) 215-3620

REGISTERED PROFESSIONAL ENGINEER
FRANZ G. MAUTNER
No. C 64725
EXP. 06/30/17
CIVIL
STATE OF CALIFORNIA

1/05/2016

#13-31 ALMOND GROVE STREET RECONSTRUCTION PHASE 1 (CONCRETE)

OWNER

TOWN OF LOS GATOS
110 EAST MAIN ST.
LOS GATOS, CA 95030

NO.	DATE	DESCRIPTION

PROJECT NO:	58.13.20
DESIGNED BY:	SEH
DRAWN BY:	SPT, JEH
CHECKED BY: JWN	DATE 12/28/15
DATE:	1/05/2016

This drawing is the property of NCE, including all patented and patentable features, and/or confidential information and its use is conditioned upon the user's agreement not to reproduce the drawing, in whole or part, nor the material described thereon, nor the use of the drawing for any purpose other than specifically permitted in writing by NCE.

SHEET TITLE

BACHMAN AVENUE
"BA" 20+00 TO "BA" 20+00
DEMOLITION PLAN

DRAWING

C3

P:\ Active Projects\Los Gatos Town - 58.58.13.20 - Almond Grove District Street Reconstruction Project\CAD\dwg\Sheets\C2-C3 Bachman Demo PCC.dwg | Layout: C3 | Printed Jan 05, 2016 @ 2:53pm | D:57.20.0 (LMS Tech)

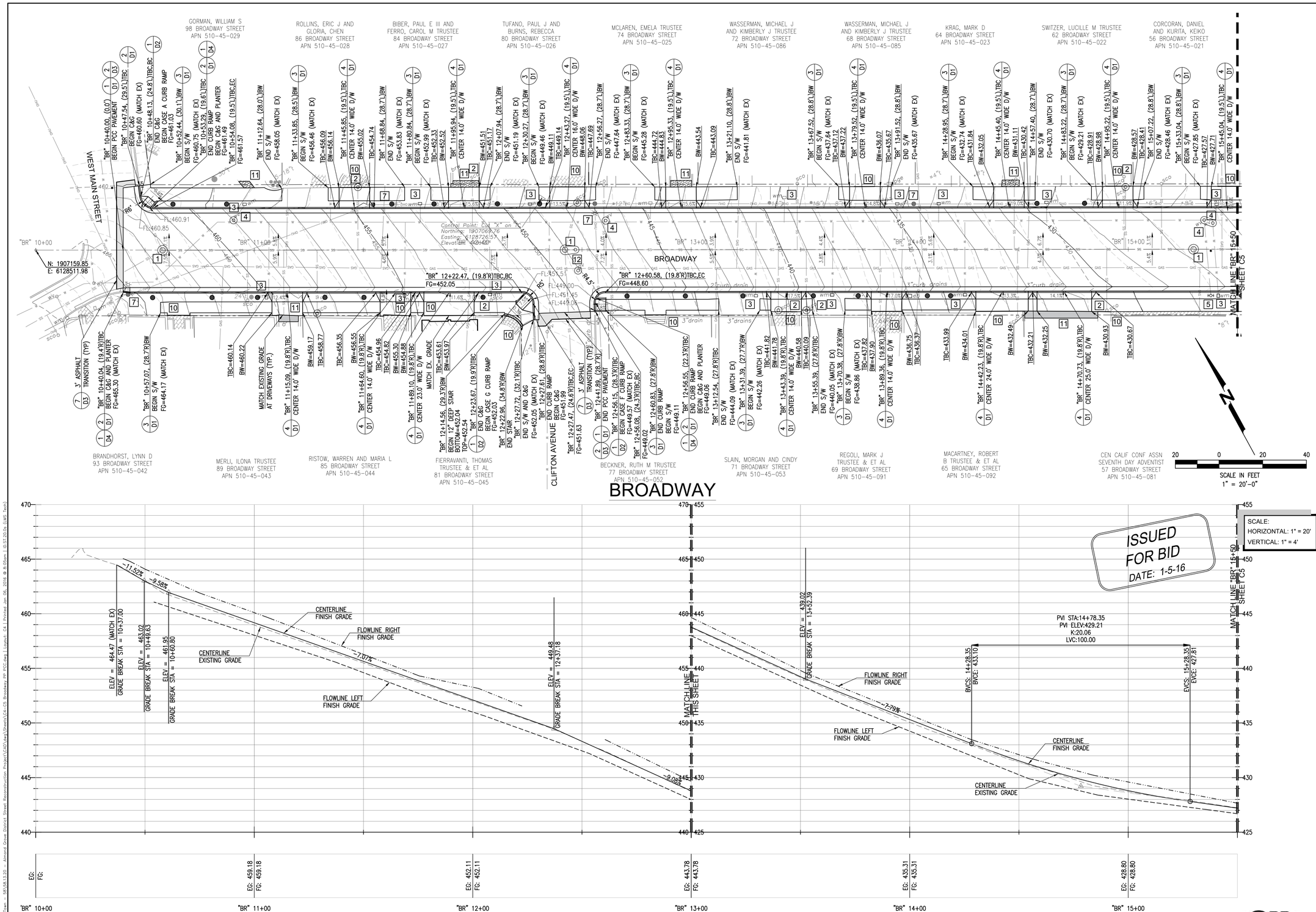

GRADING KEYNOTES:

1. SANITARY SEWER MANHOLE; ADJUST TO FINISH GRADE. (5/D2)
2. SANITARY SEWER CLEANOUT; ADJUST TO FINISH GRADE. (5/D2)
3. WATER METER BOX; REMOVE AND REPLACE. (5/D2)
4. WATER VALVE BOX; REMOVE AND REPLACE. (5/D2)
5. FIRE HYDRANT; PROTECT IN PLACE.
6. ELECTRICAL BOX; ADJUST TO FINISH GRADE. (5/D2)
7. POWER POLE; PROTECT IN PLACE.
8. CABLE BOX; ADJUST TO FINISH GRADE. (5/D2)
9. STORM DRAIN MANHOLE; ADJUST TO FINISH GRADE. (5/D2)
10. SAWCUT AND PROTECT WALKWAY OR DRIVEWAY IMPROVEMENTS.
11. 3' WALKWAY OR DRIVEWAY CONFORM; REMOVE AND REPLACE IN LIKE KIND.
12. GAS VALVE BOX; REMOVE AND REPLACE. (5/D2)

GRADING NOTES

1. PROTECT EXISTING IMPROVEMENTS INCLUDING RETAINING WALLS, FENCES, HARDSCAPES, AND THE LIKE ADJACENT TO THE RIGHT-OF-WAY AND BACK OF WALK. IF EXISTING IMPROVEMENTS MUST BE REMOVED TO CONSTRUCT THE PROPOSED IMPROVEMENTS, REPLACE IN LIKE KIND.
2. SHALLOW UTILITIES ARE EXPECTED. UTILITIES ARE SHOWN IN THEIR APPROXIMATE LOCATION. CONTRACTOR SHALL VERIFY LOCATION AND DEPTH AND COORDINATE WITH UTILITY OWNERS TO DETERMINE IF RELOCATIONS ARE REQUIRED.
3. PROTECT EXISTING SIGNAGE. IF EXISTING SIGNS MUST BE REMOVED TO CONSTRUCT THE PROPOSED IMPROVEMENTS, STORE AND REINSTALL SIGN OR REPLACE IN KIND. CONTRACTOR SHALL INVENTORY EXISTING SIGN LOCATIONS PRIOR TO CONSTRUCTION.
4. SIDEWALK LOCATIONS SHALL BE CONFIRMED BY ENGINEER PRIOR TO CONSTRUCTION.
5. SEE IMPROVEMENT PLAN FOR JOINT LAYOUT, REINFORCED CONCRETE PAVEMENT AREAS, STRIPING AND SIGNAGE.

Know what's below. Call before you dig.

NCE
501 Canal Blvd. Suite 1
Richmond, California 94804
(510) 215-3620

REGISTERED PROFESSIONAL ENGINEER FRANZ G. HALDIMANN NO. C 64725 EXP. 06/30/17 CIVIL STATE OF CALIFORNIA

1/05/2016

#13-31 ALMOND GROVE STREET RECONSTRUCTION PHASE 1 (CONCRETE)

OWNER

TOWN OF LOS GATOS
110 EAST MAIN ST.
LOS GATOS, CA 95030

NO.	DATE	DESCRIPTION

PROJECT NO:	58.13.20
DESIGNED BY:	SEH
DRAWN BY:	SPT, JEH
CHECKED BY: JWN	DATE 12/28/15
DATE:	1/05/2016

This drawing is the property of NCE, including all patented and patentable features, and/or confidential information and its use is conditioned upon the user's agreement not to reproduce the drawing, in whole or part, nor the material described thereon, nor the use of the drawing for any purpose other than specifically permitted in writing by NCE.

SHEET TITLE

BROADWAY
"BR" 10+00 TO "BR" 15+50
GRADING PLAN AND PROFILE

DRAWING

C4

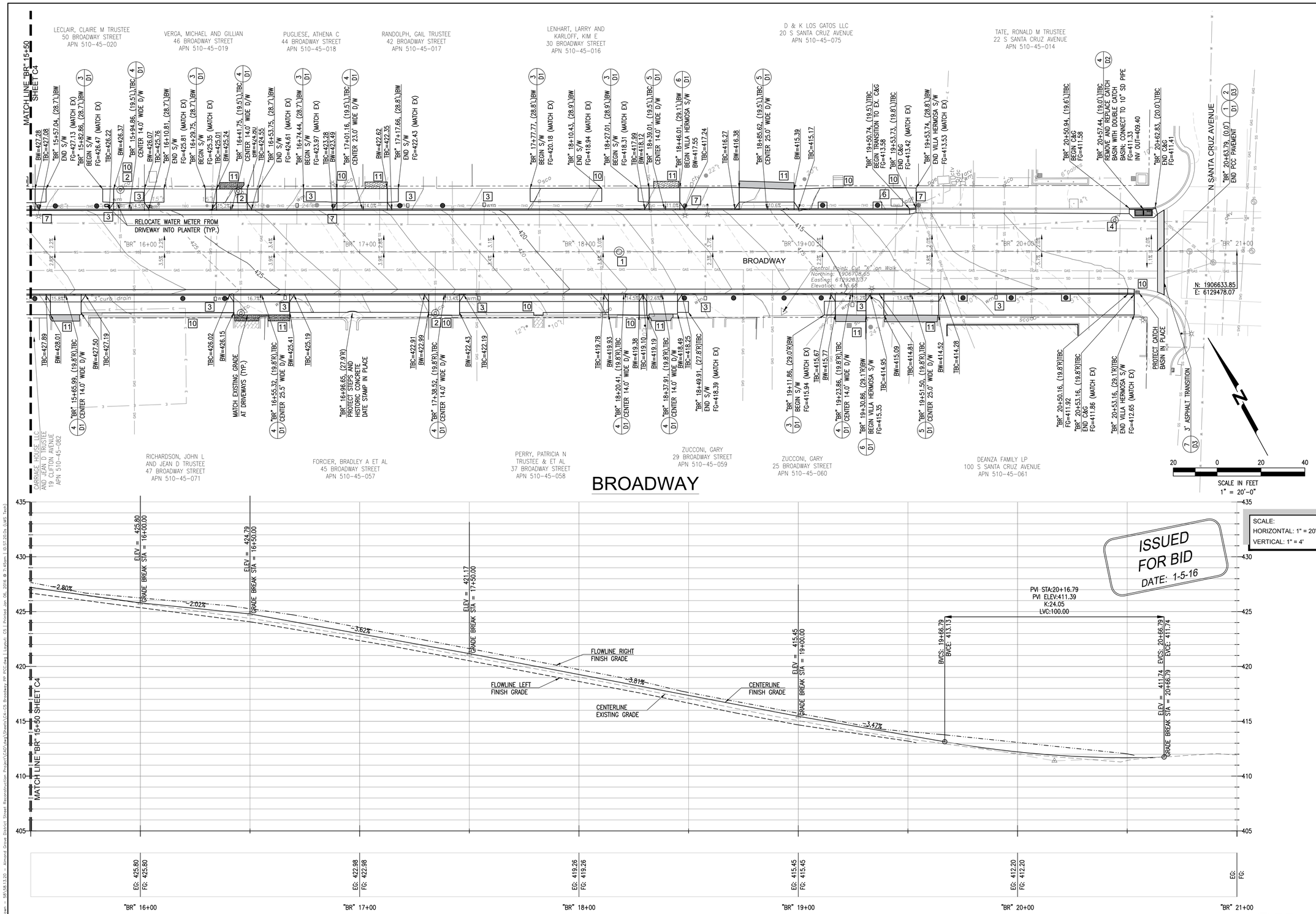

GRADING KEYNOTES:

1. SANITARY SEWER MANHOLE; ADJUST TO FINISH GRADE. (5/D2)
2. SANITARY SEWER CLEANOUT; ADJUST TO FINISH GRADE. (5/D2)
3. WATER METER BOX; REMOVE AND REPLACE. (5/D2)
4. WATER VALVE BOX; REMOVE AND REPLACE. (5/D2)
5. FIRE HYDRANT; PROTECT IN PLACE.
6. ELECTRICAL BOX; ADJUST TO FINISH GRADE. (5/D2)
7. POWER POLE; PROTECT IN PLACE.
8. CABLE BOX; ADJUST TO FINISH GRADE. (5/D2)
9. STORM DRAIN MANHOLE; ADJUST TO FINISH GRADE. (5/D2)
10. SAWCUT AND PROTECT WALKWAY OR DRIVEWAY IMPROVEMENTS.
11. 3' WALKWAY OR DRIVEWAY CONFORM; REMOVE AND REPLACE IN LIKE KIND.
12. GAS VALVE BOX; REMOVE AND REPLACE. (5/D2)

GRADING NOTES

1. PROTECT EXISTING IMPROVEMENTS INCLUDING RETAINING WALLS, FENCES, HARDSCAPES, AND THE LIKE ADJACENT TO THE RIGHT-OF-WAY AND BACK OF WALK. IF EXISTING IMPROVEMENTS MUST BE REMOVED TO CONSTRUCT THE PROPOSED IMPROVEMENTS, REPLACE IN LIKE KIND.
2. SHALLOW UTILITIES ARE EXPECTED. UTILITIES ARE SHOWN IN THEIR APPROXIMATE LOCATION. CONTRACTOR SHALL VERIFY LOCATION AND DEPTH AND COORDINATE WITH UTILITY OWNERS TO DETERMINE IF RELOCATIONS ARE REQUIRED.
3. PROTECT EXISTING SIGNAGE. IF EXISTING SIGNS MUST BE REMOVED TO CONSTRUCT THE PROPOSED IMPROVEMENTS, STORE AND REINSTALL SIGN OR REPLACE IN KIND. CONTRACTOR SHALL INVENTORY EXISTING SIGN LOCATIONS PRIOR TO CONSTRUCTION.
4. SIDEWALK LOCATIONS SHALL BE CONFIRMED BY ENGINEER PRIOR TO CONSTRUCTION.
5. SEE IMPROVEMENT PLAN FOR JOINT LAYOUT, REINFORCED CONCRETE PAVEMENT AREAS, STRIPING AND SIGNAGE.

811 Know what's below. Call before you dig.

NCE
501 Canal Blvd. Suite 1
Richmond, California 94804
(510) 215-3620

REGISTERED PROFESSIONAL ENGINEER
FRANZ G. HALDIMANN
No. C 64725
EXP. 06/30/17
CIVIL
STATE OF CALIFORNIA

1/05/2016

#13-31 ALMOND GROVE STREET RECONSTRUCTION PHASE 1 (CONCRETE)

OWNER

TOWN OF LOS GATOS
110 EAST MAIN ST.
LOS GATOS, CA 95030

NO.	DATE	DESCRIPTION

PROJECT NO:	58.13.20
DESIGNED BY:	SEH
DRAWN BY:	SPT, JEH
CHECKED BY: JWN	DATE 12/28/15
DATE:	1/05/2016

This drawing is the property of NCE, including all patented and patentable features, and/or confidential information and its use is conditioned upon the user's agreement not to reproduce the drawing, in whole or part, nor the material described thereon, nor the use of the drawing for any purpose other than specifically permitted in writing by NCE.

SHEET TITLE

BROADWAY
"BR" 15+50 TO "BR" 21+00
GRADING PLAN AND
PROFILE

DRAWING

C5

SHEET 7 OF 18

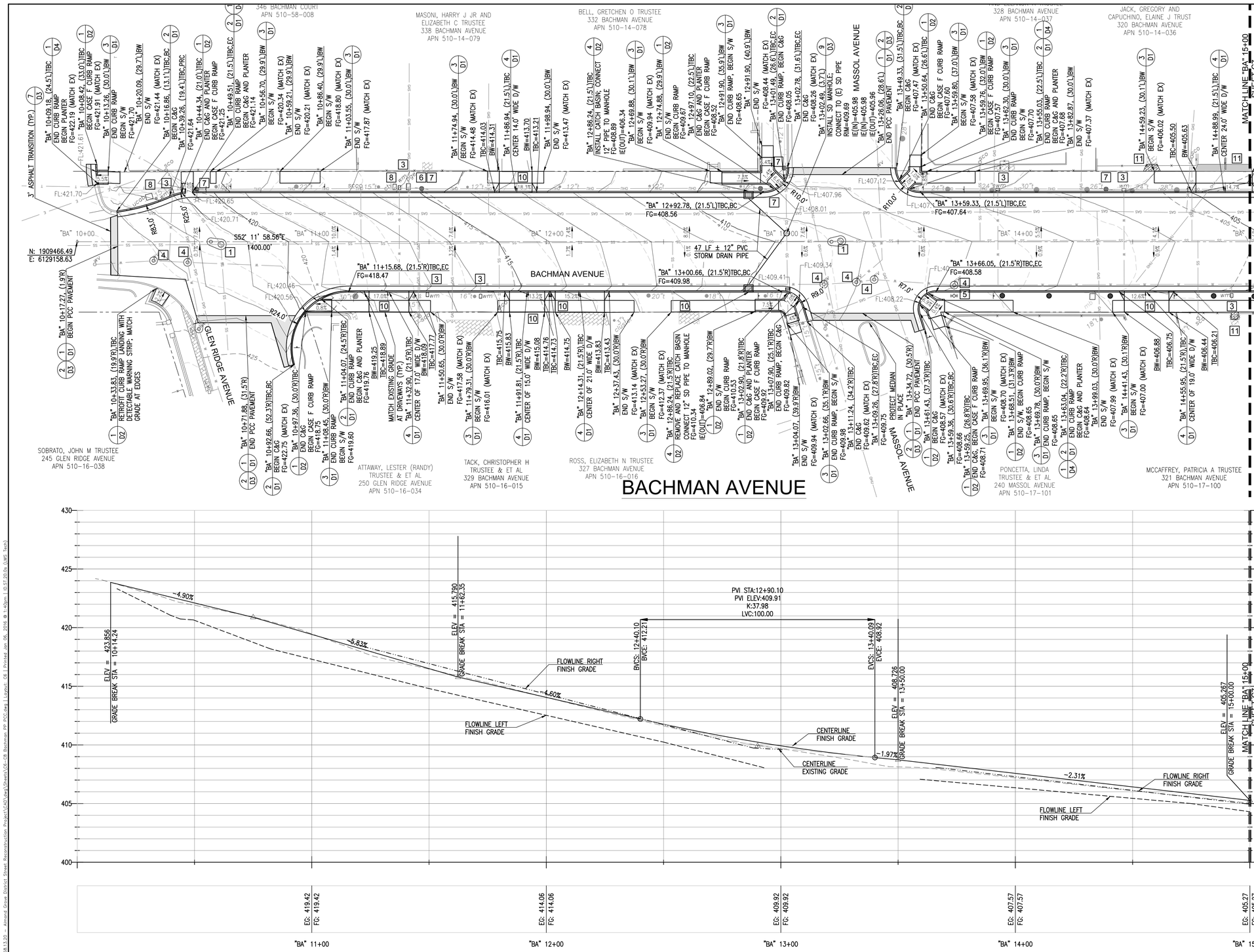

ISSUED FOR BID
DATE: 1-5-16

GRADING KEYNOTES:

1. SANITARY SEWER MANHOLE; ADJUST TO FINISH GRADE. (5/D2)
2. SANITARY SEWER CLEANOUT; ADJUST TO FINISH GRADE. (5/D2)
3. WATER METER BOX; REMOVE AND REPLACE. (5/D2)
4. WATER VALVE BOX; REMOVE AND REPLACE. (5/D2)
5. FIRE HYDRANT; PROTECT IN PLACE.
6. ELECTRICAL BOX; ADJUST TO FINISH GRADE. (5/D2)
7. POWER POLE; PROTECT IN PLACE.
8. CABLE BOX; ADJUST TO FINISH GRADE. (5/D2)
9. STORM DRAIN MANHOLE; ADJUST TO FINISH GRADE. (5/D2)
10. SAWCUT AND PROTECT WALKWAY OR DRIVEWAY IMPROVEMENTS.
11. 3' WALKWAY OR DRIVEWAY CONFORM; REMOVE AND REPLACE IN LIKE KIND.
12. GAS VALVE BOX; REMOVE AND REPLACE. (5/D2)

GRADING NOTES

1. PROTECT EXISTING IMPROVEMENTS INCLUDING RETAINING WALLS, FENCES, HARDSCAPES, AND THE LIKE ADJACENT TO THE RIGHT-OF-WAY AND BACK OF WALK. IF EXISTING IMPROVEMENTS MUST BE REMOVED TO CONSTRUCT THE PROPOSED IMPROVEMENTS, REPLACE IN LIKE KIND.
2. SHALLOW UTILITIES ARE EXPECTED. UTILITIES ARE SHOWN IN THEIR APPROXIMATE LOCATION. CONTRACTOR SHALL VERIFY LOCATION AND DEPTH AND COORDINATE WITH UTILITY OWNERS TO DETERMINE IF RELOCATIONS ARE REQUIRED.
3. PROTECT EXISTING SIGNAGE. IF EXISTING SIGNS MUST BE REMOVED TO CONSTRUCT THE PROPOSED IMPROVEMENTS, STORE AND REINSTALL SIGN OR REPLACE IN KIND. CONTRACTOR SHALL INVENTORY EXISTING SIGN LOCATIONS PRIOR TO CONSTRUCTION.
4. SIDEWALK LOCATIONS SHALL BE CONFIRMED BY ENGINEER PRIOR TO CONSTRUCTION.
5. SEE IMPROVEMENT PLAN FOR JOINT LAYOUT, REINFORCED CONCRETE PAVEMENT AREAS, STRIPING AND SIGNAGE.

811 Know what's below. Call before you dig.

NCE
501 Canal Blvd. Suite 1
Richmond, California 94804
(510) 215-3620

REGISTERED PROFESSIONAL ENGINEER FRANZ G. HALDIMANN No. C 64725 EXP. 06/30/17 CIVIL STATE OF CALIFORNIA

1/05/2016

#13-31 ALMOND GROVE STREET RECONSTRUCTION PHASE 1 (CONCRETE)

OWNER

TOWN OF LOS GATOS
110 EAST MAIN ST.
LOS GATOS, CA 95030

NO.	DATE	DESCRIPTION

PROJECT NO:	58.13.20
DESIGNED BY:	SEH
DRAWN BY:	SPT, JEH
CHECKED BY: JWN	DATE 12/28/15
DATE:	1/05/2016

This drawing is the property of NCE, including all patented and patentable features, and/or confidential information and its use is conditioned upon the user's agreement not to reproduce the drawing, in whole or part, nor the material described thereon, nor the use of the drawing for any purpose other than specifically permitted in writing by NCE.

SHEET TITLE

BACHMAN "BA" 10+00 TO "BA" 15+00 GRADING PLAN AND PROFILE

DRAWING

C6

SHEET 8 OF 18

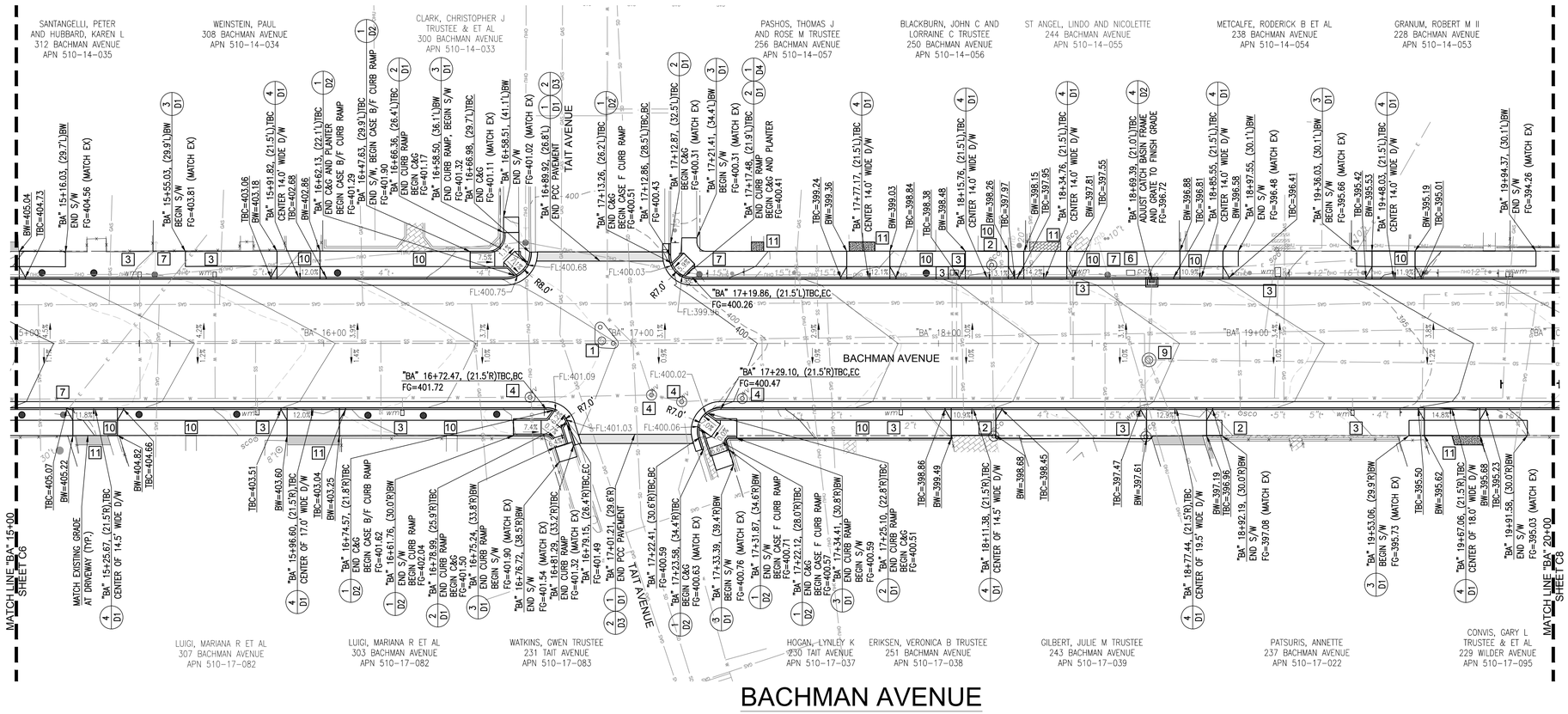

BACHMAN AVENUE

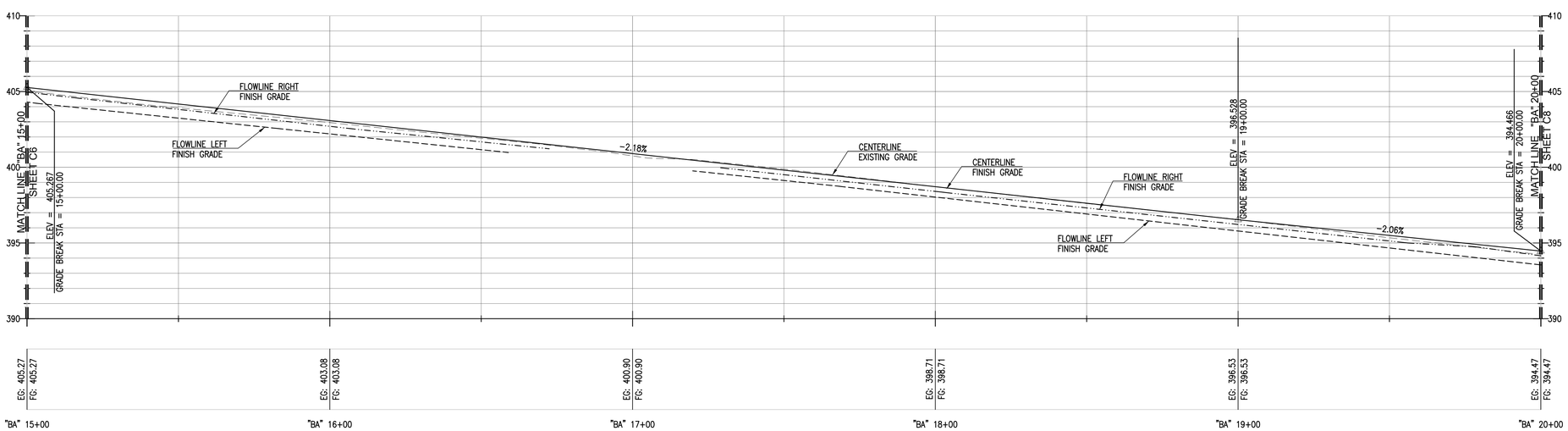

SCALE:
HORIZONTAL: 1" = 20'
VERTICAL: 1" = 4'

GRADING KEYNOTES:

1. SANITARY SEWER MANHOLE; ADJUST TO FINISH GRADE. (5/D2)
2. SANITARY SEWER CLEANOUT; ADJUST TO FINISH GRADE. (5/D2)
3. WATER METER BOX; REMOVE AND REPLACE. (5/D2)
4. WATER VALVE BOX; REMOVE AND REPLACE. (5/D2)
5. FIRE HYDRANT; PROTECT IN PLACE.
6. ELECTRICAL BOX; ADJUST TO FINISH GRADE. (5/D2)
7. POWER POLE; PROTECT IN PLACE.
8. CABLE BOX; ADJUST TO FINISH GRADE. (5/D2)
9. STORM DRAIN MANHOLE; ADJUST TO FINISH GRADE. (5/D2)
10. SAWCUT AND PROTECT WALKWAY OR DRIVEWAY IMPROVEMENTS.
11. 3' WALKWAY OR DRIVEWAY CONFORM; REMOVE AND REPLACE IN LIKE KIND.
12. GAS VALVE BOX; REMOVE AND REPLACE. (5/D2)

GRADING NOTES

1. PROTECT EXISTING IMPROVEMENTS INCLUDING RETAINING WALLS, FENCES, HARDSCAPES, AND THE LIKE ADJACENT TO THE RIGHT-OF-WAY AND BACK OF WALK. IF EXISTING IMPROVEMENTS MUST BE REMOVED TO CONSTRUCT THE PROPOSED IMPROVEMENTS, REPLACE IN LIKE KIND.
2. SHALLOW UTILITIES ARE EXPECTED. UTILITIES ARE SHOWN IN THEIR APPROXIMATE LOCATION. CONTRACTOR SHALL VERIFY LOCATION AND DEPTH AND COORDINATE WITH UTILITY OWNERS TO DETERMINE IF RELOCATIONS ARE REQUIRED.
3. PROTECT EXISTING SIGNAGE. IF EXISTING SIGNS MUST BE REMOVED TO CONSTRUCT THE PROPOSED IMPROVEMENTS, STORE AND REINSTALL SIGN OR REPLACE IN KIND. CONTRACTOR SHALL INVENTORY EXISTING SIGN LOCATIONS PRIOR TO CONSTRUCTION.
4. SIDEWALK LOCATIONS SHALL BE CONFIRMED BY ENGINEER PRIOR TO CONSTRUCTION.
5. SEE IMPROVEMENT PLAN FOR JOINT LAYOUT, REINFORCED CONCRETE PAVEMENT AREAS, STRIPING AND SIGNAGE.

ISSUED FOR BID
DATE: 1-5-16

811 Know what's below. Call before you dig.

NCE
501 Canal Blvd. Suite 1
Richmond, California 94804
(510) 215-3620

REGISTERED PROFESSIONAL ENGINEER FRANZ G. HALDEMAN RCE 64725 EXP. 06/30/17 CIVIL STATE OF CALIFORNIA

1/05/2016

#13-31 ALMOND GROVE STREET RECONSTRUCTION PHASE 1 (CONCRETE)

OWNER

TOWN OF LOS GATOS
110 EAST MAIN ST.
LOS GATOS, CA 95030

NO.	DATE	DESCRIPTION

PROJECT NO:	58.13.20
DESIGNED BY:	SEH
DRAWN BY:	SPT, JEH
CHECKED BY: JWN	DATE 12/28/15
DATE:	1/05/2016

This drawing is the property of NCE, including all patented and patentable features, and/or confidential information and its use is conditioned upon the user's agreement not to reproduce the drawing, in whole or part, nor the material described thereon, nor the use of the drawing for any purpose other than specifically permitted in writing by NCE.

SHEET TITLE

BACHMAN "BA" 15+00 TO "BA" 20+00 GRADING PLAN AND PROFILE

DRAWING

C7

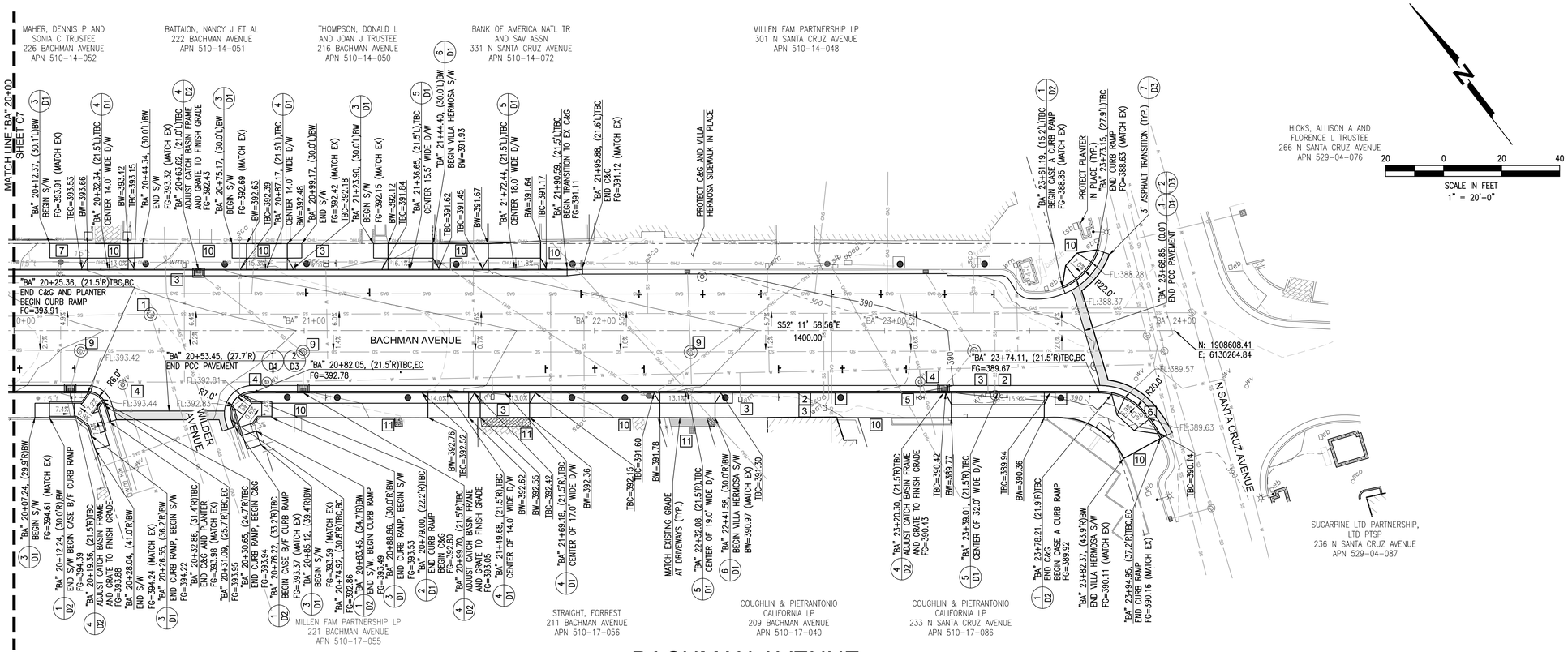

BACHMAN AVENUE

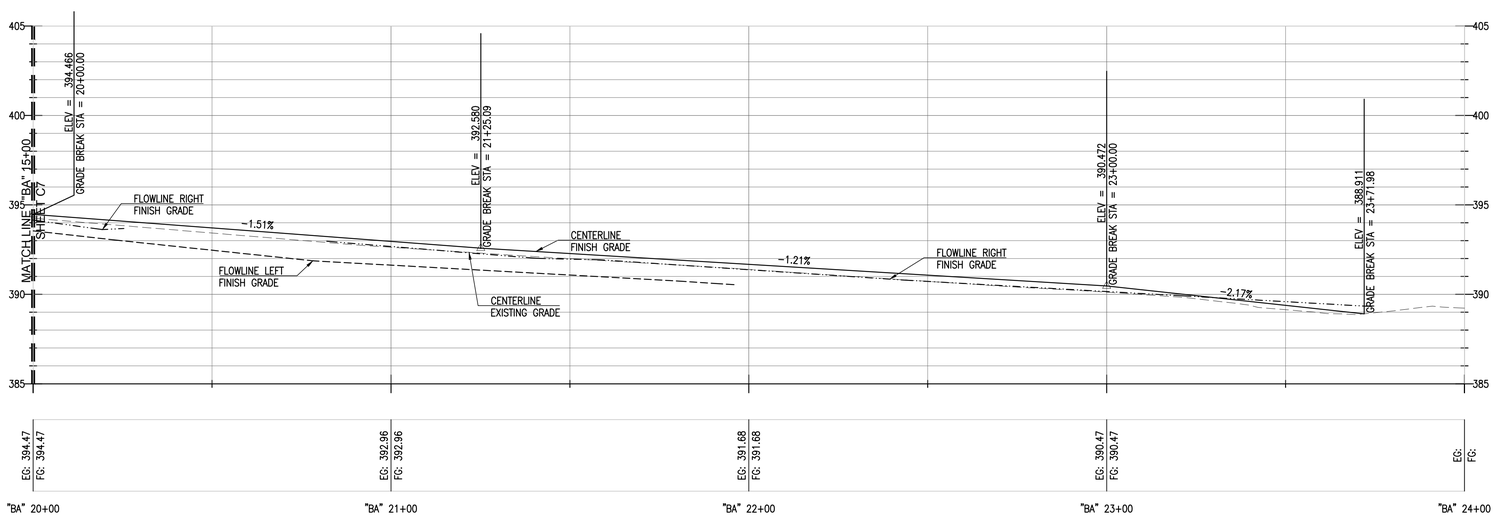

SCALE:
HORIZONTAL: 1" = 20'
VERTICAL: 1" = 4'

ISSUED FOR BID
DATE: 1-5-16

GRADING KEYNOTES:

1. SANITARY SEWER MANHOLE; ADJUST TO FINISH GRADE. (5/D2)
2. SANITARY SEWER CLEANOUT; ADJUST TO FINISH GRADE. (5/D2)
3. WATER METER BOX; REMOVE AND REPLACE. (5/D2)
4. WATER VALVE BOX; REMOVE AND REPLACE. (5/D2)
5. FIRE HYDRANT; PROTECT IN PLACE.
6. ELECTRICAL BOX; ADJUST TO FINISH GRADE. (5/D2)
7. POWER POLE; PROTECT IN PLACE.
8. CABLE BOX; ADJUST TO FINISH GRADE. (5/D2)
9. STORM DRAIN MANHOLE; ADJUST TO FINISH GRADE. (5/D2)
10. SAWCUT AND PROTECT WALKWAY OR DRIVEWAY IMPROVEMENTS.
11. 3' WALKWAY OR DRIVEWAY CONFORM; REMOVE AND REPLACE IN LIKE KIND.
12. GAS VALVE BOX; REMOVE AND REPLACE. (5/D2)

GRADING NOTES

1. PROTECT EXISTING IMPROVEMENTS INCLUDING RETAINING WALLS, FENCES, HARDSCAPES, AND THE LIKE ADJACENT TO THE RIGHT-OF-WAY AND BACK OF WALK. IF EXISTING IMPROVEMENTS MUST BE REMOVED TO CONSTRUCT THE PROPOSED IMPROVEMENTS, REPLACE IN LIKE KIND.
2. SHALLOW UTILITIES ARE EXPECTED. UTILITIES ARE SHOWN IN THEIR APPROXIMATE LOCATION. CONTRACTOR SHALL VERIFY LOCATION AND DEPTH AND COORDINATE WITH UTILITY OWNERS TO DETERMINE IF RELOCATIONS ARE REQUIRED.
3. PROTECT EXISTING SIGNAGE. IF EXISTING SIGNS MUST BE REMOVED TO CONSTRUCT THE PROPOSED IMPROVEMENTS, STORE AND REINSTALL SIGN OR REPLACE IN KIND. CONTRACTOR SHALL INVENTORY EXISTING SIGN LOCATIONS PRIOR TO CONSTRUCTION.
4. SIDEWALK LOCATIONS SHALL BE CONFIRMED BY ENGINEER PRIOR TO CONSTRUCTION.
5. SEE IMPROVEMENT PLAN FOR JOINT LAYOUT, REINFORCED CONCRETE PAVEMENT AREAS, STRIPING AND SIGNAGE.

811 Know what's below. Call before you dig.

NCE
501 Canal Blvd. Suite 1
Richmond, California 94804
(510) 215-3620

REGISTERED PROFESSIONAL ENGINEER FRANZ G. HALDIMANN No. C 64725 EXP. 06/30/17 CIVIL STATE OF CALIFORNIA

1/05/2016

#13-31 ALMOND GROVE STREET RECONSTRUCTION PHASE 1 (CONCRETE)

OWNER

TOWN OF LOS GATOS
110 EAST MAIN ST.
LOS GATOS, CA 95030

NO.	DATE	DESCRIPTION

PROJECT NO:	58.13.20
DESIGNED BY:	SEH
DRAWN BY:	SPT, JEH
CHECKED BY: JWN	DATE 12/28/15
DATE:	1/05/2016

This drawing is the property of NCE, including all patented and patentable features, and/or confidential information and its use is conditioned upon the user's agreement not to reproduce the drawing, in whole or part, nor the material described thereon, nor the use of the drawing for any purpose other than specifically permitted in writing by NCE.

SHEET TITLE

BACHMAN "BA" 20+00 TO "BA" 24+00 GRADING PLAN AND PROFILE

DRAWING

C8

SHEET 10 OF 18

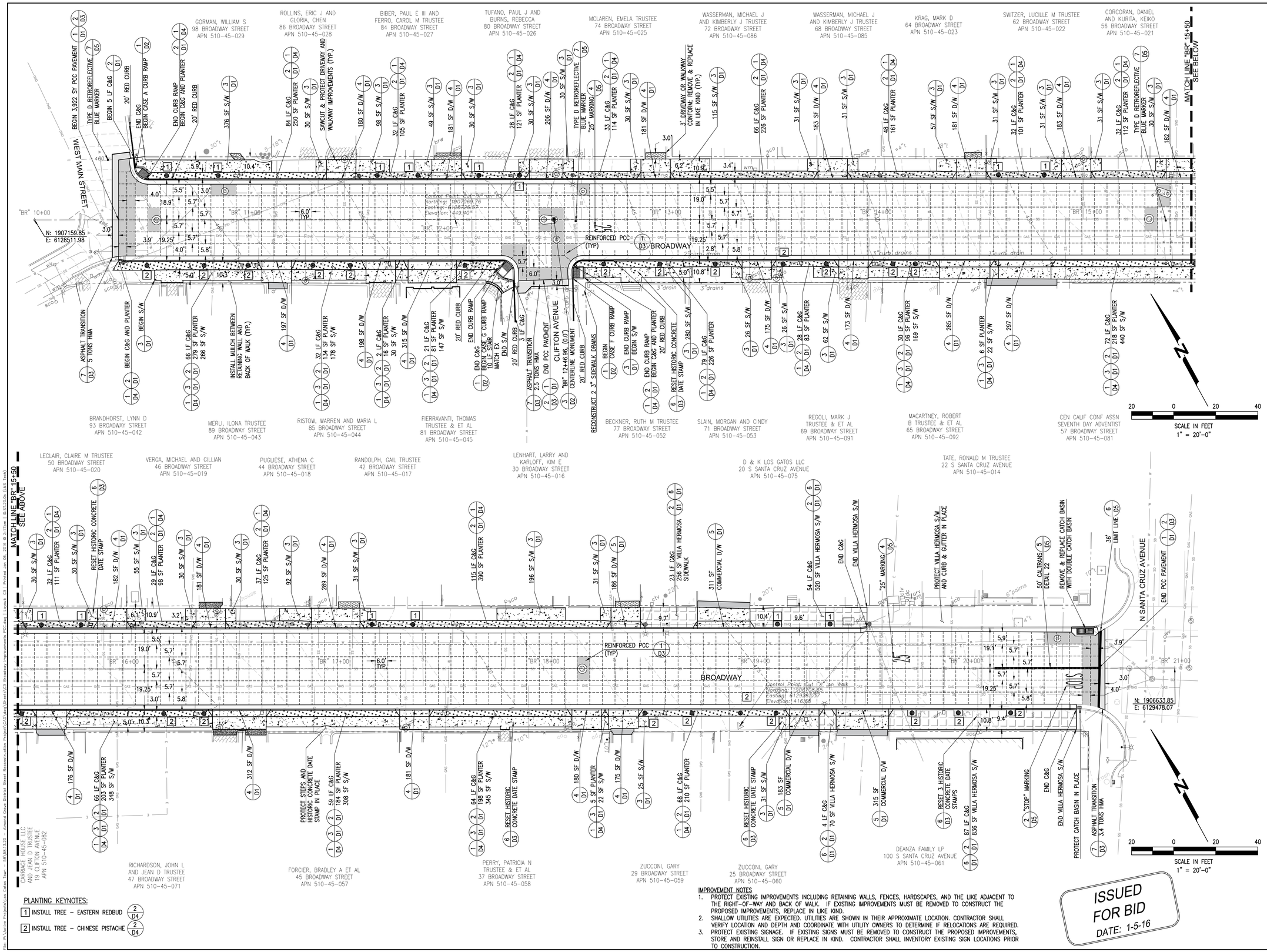

PLANTING KEYNOTES:

1. INSTALL TREE – EASTERN REDBUD (2 / D4)
2. INSTALL TREE – CHINESE PISTACHE (2 / D4)

IMPROVEMENT NOTES

1. PROTECT EXISTING IMPROVEMENTS INCLUDING RETAINING WALLS, FENCES, HARDSCAPES, AND THE LIKE ADJACENT TO THE RIGHT-OF-WAY AND BACK OF WALK. IF EXISTING IMPROVEMENTS MUST BE REMOVED TO CONSTRUCT THE PROPOSED IMPROVEMENTS, REPLACE IN LIKE KIND.
2. SHALLOW UTILITIES ARE EXPECTED. UTILITIES ARE SHOWN IN THEIR APPROXIMATE LOCATION. CONTRACTOR SHALL VERIFY LOCATION AND DEPTH AND COORDINATE WITH UTILITY OWNERS TO DETERMINE IF RELOCATIONS ARE REQUIRED.
3. PROTECT EXISTING SIGNAGE. IF EXISTING SIGNS MUST BE REMOVED TO CONSTRUCT THE PROPOSED IMPROVEMENTS, STORE AND REINSTALL SIGN OR REPLACE IN KIND. CONTRACTOR SHALL INVENTORY EXISTING SIGN LOCATIONS PRIOR TO CONSTRUCTION.

ISSUED FOR BID
DATE: 1-5-16

NCE
501 Canal Blvd. Suite 1
Richmond, California 94804
(510) 215-3620

REGISTERED PROFESSIONAL ENGINEER
FRANZ G. HALDIMANN
NO. C 64725
EXP. 06/30/17
CIVIL
STATE OF CALIFORNIA

1/05/2016

#13-31 ALMOND GROVE STREET RECONSTRUCTION PHASE 1 (CONCRETE)

OWNER

TOWN OF LOS GATOS
110 EAST MAIN ST.
LOS GATOS, CA 95030

NO.	DATE	DESCRIPTION

PROJECT NO:	58.13.20
DESIGNED BY:	SEH
DRAWN BY:	SPT, JEH
CHECKED BY: JWN	DATE 12/28/15
DATE:	1/05/2016

This drawing is the property of NCE, including all patented and patentable features, and/or confidential information and its use is conditioned upon the user's agreement not to reproduce the drawing, in whole or part, nor the material described thereon, nor the use of the drawing for any purpose other than specifically permitted in writing by NCE.

SHEET TITLE

BROADWAY
"BR" 10+00 TO "BR" 21+00
IMPROVEMENT PLAN

DRAWING

C9

SHEET 11 OF 18

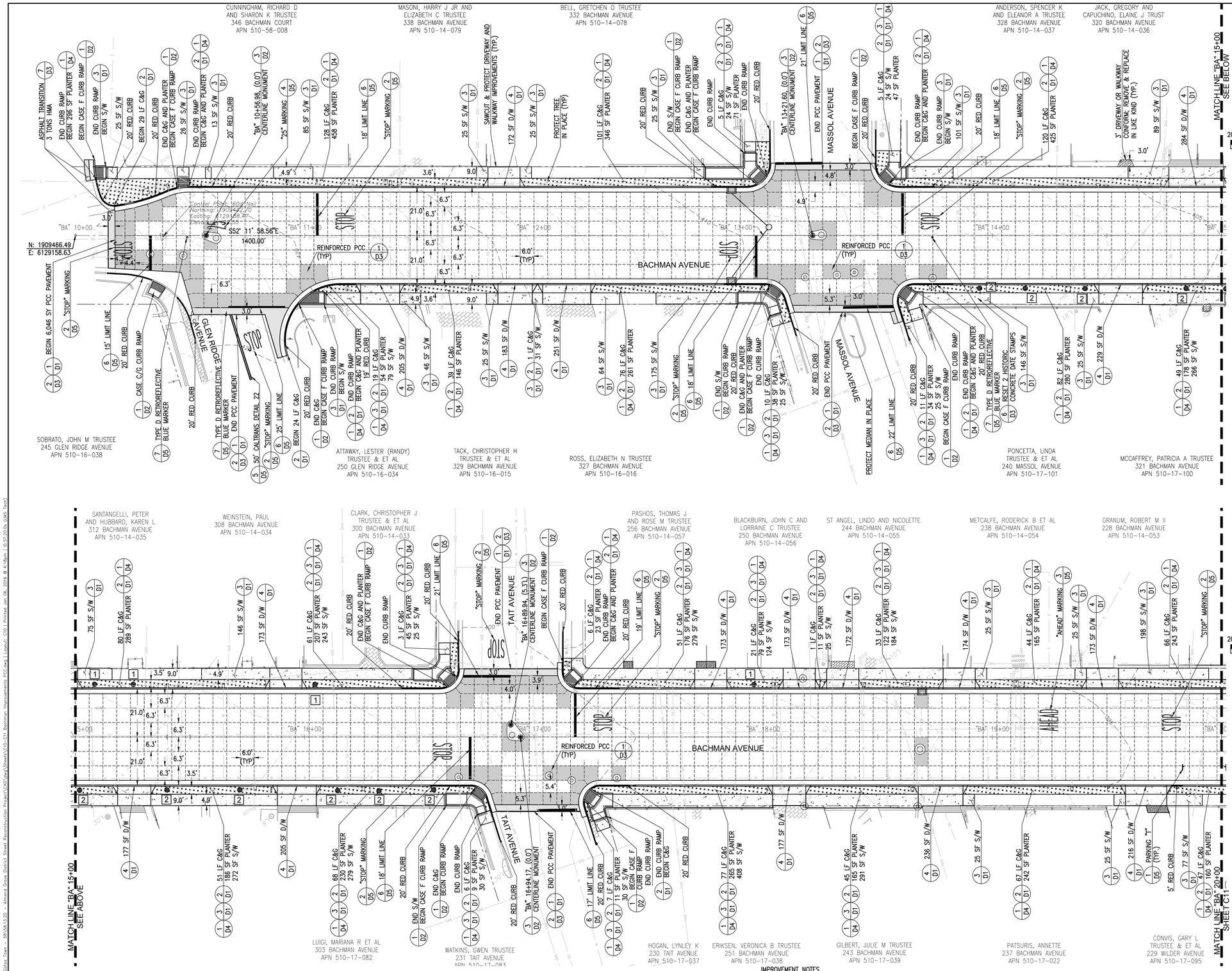

PLANTING KEYNOTES:

1 INSTALL TREE – EASTERN REDBUD (2/D4)

2 INSTALL TREE – CHINESE PISTACHE (2/D4)

IMPROVEMENT NOTES

1. PROTECT EXISTING IMPROVEMENTS INCLUDING RETAINING WALLS, FENCES, HARDSCAPES, AND THE LIKE ADJACENT TO THE RIGHT-OF-WAY AND BACK OF WALK. IF EXISTING IMPROVEMENTS MUST BE REMOVED TO CONSTRUCT THE PROPOSED IMPROVEMENTS, REPLACE IN LIKE KIND.
2. SHALLOW UTILITIES ARE EXPECTED. UTILITIES ARE SHOWN IN THEIR APPROXIMATE LOCATION. CONTRACTOR SHALL VERIFY LOCATION AND DEPTH AND COORDINATE WITH UTILITY OWNERS TO DETERMINE IF RELOCATIONS ARE REQUIRED.
3. PROTECT EXISTING SIGNAGE. IF EXISTING SIGNS MUST BE REMOVED TO CONSTRUCT THE PROPOSED IMPROVEMENTS, STORE AND REINSTALL SIGN OR REPLACE IN KIND. CONTRACTOR SHALL INVENTORY EXISTING SIGN LOCATIONS PRIOR TO CONSTRUCTION.

ISSUED FOR BID
DATE: 1-5-16

811 Know what's below. Call before you dig.

NCE
501 Canal Blvd. Suite 1
Richmond, California 94804
(510) 215-3620

REGISTERED PROFESSIONAL ENGINEER FRANZ G. HALDIMANN RCE 64725 EXP. 06/30/17 CIVIL STATE OF CALIFORNIA

1/05/2016

#13-31 ALMOND GROVE STREET RECONSTRUCTION PHASE 1 (CONCRETE)

OWNER

TOWN OF LOS GATOS
110 EAST MAIN ST.
LOS GATOS, CA 95030

NO.	DATE	DESCRIPTION

PROJECT NO:	58.13.20
DESIGNED BY:	SEH
DRAWN BY:	SPT, JEH
CHECKED BY: JWN	DATE 12/28/15
DATE:	1/05/2016

This drawing is the property of NCE, including all patented and patentable features, and/or confidential information and its use is conditioned upon the user's agreement not to reproduce the drawing, in whole or part, nor the material described thereon, nor the use of the drawing for any purpose other than specifically permitted in writing by NCE.

SHEET TITLE

BACHMAN AVENUE
"BA" 10+00 TO "BA" 20+00
IMPROVEMENT PLAN

DRAWING

C10

SHEET 12 OF 18

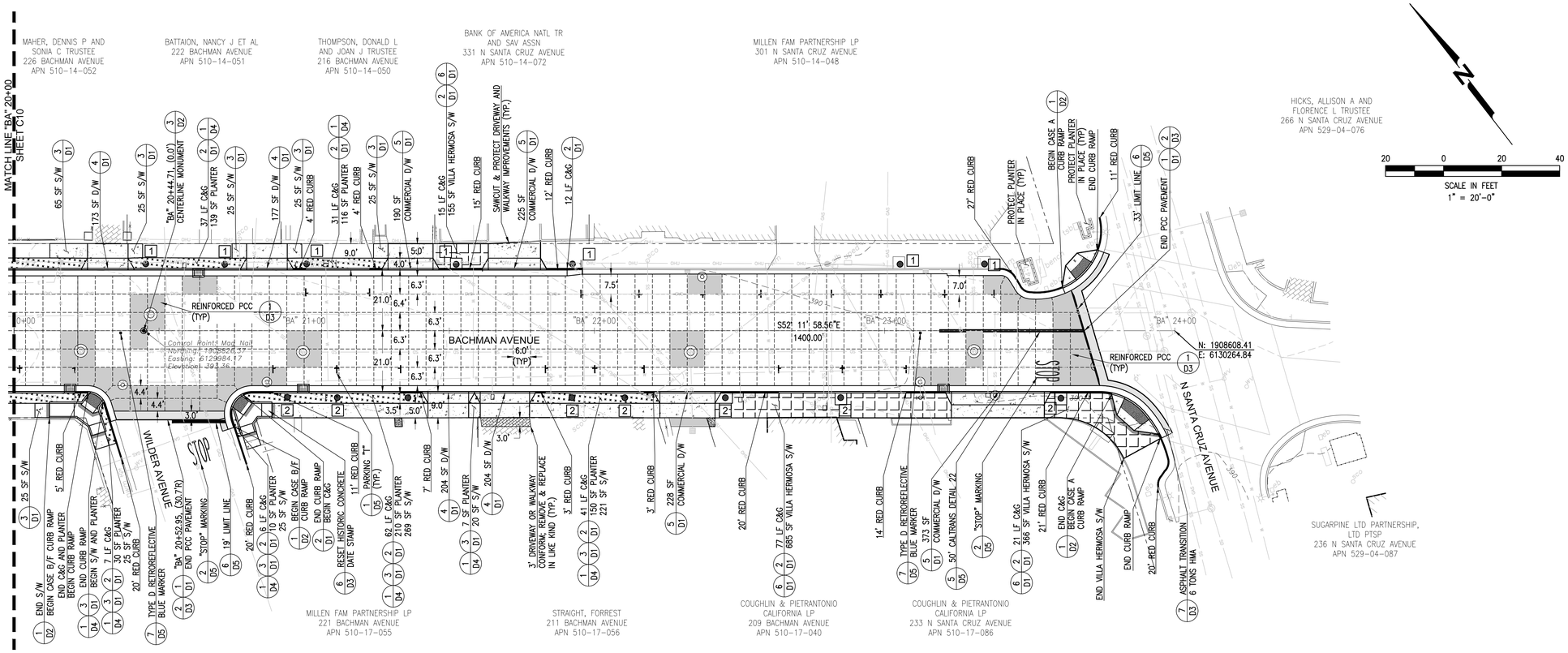

PLANTING KEYNOTES:

1. INSTALL TREE – EASTERN REDBUD (2/D4)
2. INSTALL TREE – CHINESE PISTACHE (2/D4)

IMPROVEMENT NOTES

1. PROTECT EXISTING IMPROVEMENTS INCLUDING RETAINING WALLS, FENCES, HARDSCAPES, AND THE LIKE ADJACENT TO THE RIGHT-OF-WAY AND BACK OF WALK. IF EXISTING IMPROVEMENTS MUST BE REMOVED TO CONSTRUCT THE PROPOSED IMPROVEMENTS, REPLACE IN LIKE KIND.
2. SHALLOW UTILITIES ARE EXPECTED. UTILITIES ARE SHOWN IN THEIR APPROXIMATE LOCATION. CONTRACTOR SHALL VERIFY LOCATION AND DEPTH AND COORDINATE WITH UTILITY OWNERS TO DETERMINE IF RELOCATIONS ARE REQUIRED.
3. PROTECT EXISTING SIGNAGE. IF EXISTING SIGNS MUST BE REMOVED TO CONSTRUCT THE PROPOSED IMPROVEMENTS, STORE AND REINSTALL SIGN OR REPLACE IN KIND. CONTRACTOR SHALL INVENTORY EXISTING SIGN LOCATIONS PRIOR TO CONSTRUCTION.

ISSUED FOR BID
DATE: 1-5-16

Know what's below. Call before you dig.

NCE
501 Canal Blvd. Suite 1
Richmond, California 94804
(510) 215-3620

REGISTERED PROFESSIONAL ENGINEER FRANZ G. HALDIMANN No. C 64725 EXP. 06/30/17 CIVIL STATE OF CALIFORNIA

1/05/2016

#13-31 ALMOND GROVE STREET RECONSTRUCTION PHASE 1 (CONCRETE)

OWNER

TOWN OF LOS GATOS
110 EAST MAIN ST.
LOS GATOS, CA 95030

NO.	DATE	DESCRIPTION

PROJECT NO:	58.13.20
DESIGNED BY:	SEH
DRAWN BY:	SPT, JEH
CHECKED BY: JWN	DATE 12/28/15
DATE:	1/05/2016

This drawing is the property of NCE, including all patented and patentable features, and/or confidential information and its use is conditioned upon the user's agreement not to reproduce the drawing, in whole or part, nor the material described thereon, nor the use of the drawing for any purpose other than specifically permitted in writing by NCE.

SHEET TITLE

BACHMAN AVENUE
"BA" 20+00 TO "BA" 20+00
IMPROVEMENT PLAN

DRAWING

C11

SHEET 13 OF 18

File: P:\Active Projects\Los Gatos Town - 58.58.13.20 - Almond Grove District Street Reconstruction Project\CAD\Area\Sheets\C10-C11 Bachman Improvements PCC.dwg | Layout: C11 | Printed Jan 06, 2016 @ 4:18pm | 03.17.2015 (LMS Tech)

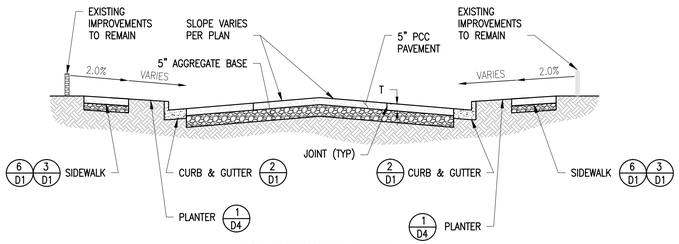

PCC PAVEMENT SECTION

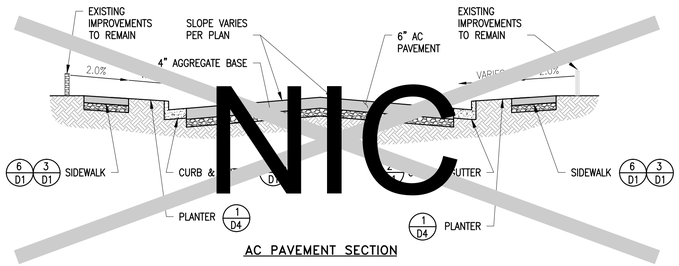

AC PAVEMENT SECTION

NOTES:

1. PROTECT EXISTING IMPROVEMENTS, INCLUDING RETAINING WALLS, FENCES, HARDSCAPES, AND THE LIKE, ADJACENT TO THE RIGHT-OF-WAY AND BACK OF WALK. IF EXISTING IMPROVEMENTS MUST BE REMOVED TO CONSTRUCT THE PROPOSED IMPROVEMENTS, REPLACE IN LIKE KIND.
2. ALL PCC PAVEMENT JOINTS SHALL BE SAWCUT 1/8" WIDE TO A DEPTH OF T/3, TYPICAL. JOINTS SHALL BE UNSEALED. ALL DOWELED CONSTRUCTION JOINTS SHALL BE CONSTRUCTED PER DETAIL 3 ON SHEET D3.
3. PROPOSED IMPROVEMENTS SHALL BE INSTALLED TO THE DIMENSIONS AND GRADES AS INDICATED ON GRADING AND IMPROVEMENT PLANS.

1 / D1 TYPICAL SECTIONS
NTS

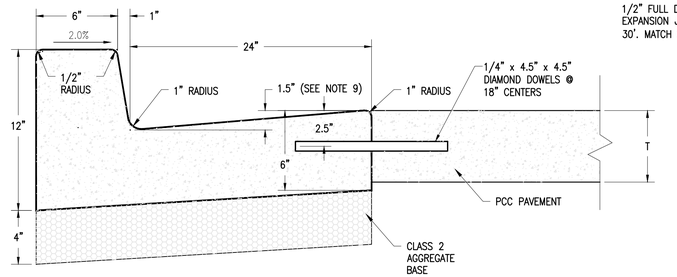

NOTES:

1. ALL RADII LESS THAN 100' SHALL USE FLEXIBLE WOOD OR METAL FORMS TO ELIMINATE ANGULAR POINTS AT 10' SECTION POINTS.
2. SAWCUT AND REMOVE 20 IN. (MIN.) STREET SECTION FOR CURB AND GUTTER INSTALLATION ON EXISTING STREETS.
3. 3/4" EXPANSION JOINTS TO BE PLACED AT DRIVEWAY SECTIONS, CURB RETURNS, CURB RAMPS & COLD JOINTS OR A MAX. OF 30' C/C. EXPANSION JOINTS SHALL PROTRUDE 1" BELOW THE BOTTOM OF GUTTER.
4. THRU JOINTS SHALL BE PLACED ADJACENT TO CATCH BASINS, INLETS AT POINTS OF TANGENCY ON STREETS, AND AT ALLEY AND DRIVEWAY RETURNS. MAXIMUM SPACING SHALL BE 30' PRE-MOLDED JOINT FILLER, SHALL BE 1/2" WIDE AND CONFORM TO AASHTO DESIGN M213. DUMMY JOINTS SHALL BE PLACED IN CONJUNCTION WITH PCC PAVEMENT JOINTS.
5. FINISHED WORK SHALL NOT VARY MORE THAN 1/8" IN GRADE AND 1/4" IN ALIGNMENT.
6. THE FINISHED CURB SHALL IMMEDIATELY BE SPRAYED WITH A TRANSPARENT CURING COMPOUND. CURB SHALL BE COVERED BY WATERPROOF PAPER OR PLASTIC MEMBRANE IN THE EVENT OF RAIN OR OTHER UNSUITABLE WEATHER. CURING TIME SHALL BE A MINIMUM OF 72 HOURS.
7. ALL CURB AND GUTTER SHALL BE PLACED ON A MIN. OF 4" AGGREGATE BASE CLASS 2 95% MAX. COMPACTION ASTM D1557.
8. GUTTER PAN SLOPE SHALL NOT EXCEED 5% SLOPE AT PEDESTRIAN CURB RAMP ENTRY LOCATIONS. CONTRACTOR SHALL USE 1.2" (MAX) BETWEEN LIP OF GUTTER AND FLOW LINE AT THESE LOCATIONS.
9. ALL CURB AND GUTTER SHALL BE EMBEDDED ON BOTH ENDS INTO EXISTING CURB AND GUTTER USING #4 REBAR DOWELS (ONE DOWEL IN THE CENTER OF THE GUTTER, ONE DOWEL IN THE CENTER OF THE CURB.)
10. ALL CONCRETE SHALL INCLUDE ONE (1) POUND OF LAMPBLACK PER CUBIC YARD OF CONCRETE. SEE GENERAL NOTE 7 ON SHEET G-2.

2 / D1 CURB AND GUTTER
NTS

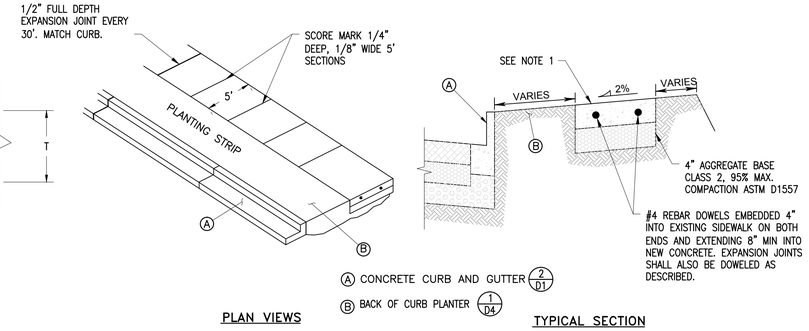

PLAN VIEWS

TYPICAL SECTION

NOTES:

1. SIDEWALKS SHALL BE A MINIMUM OF 4" THICK.
2. FULL EXPANSION JOINTS SHALL BE PLACED TO MATCH THOSE PLACED IN ADJACENT CURB & GUTTER, WITH MAXIMUM SPACING OF 30 FEET.
3. SUBGRADE SHALL HAVE 95% MAXIMUM COMPACTION ASTM D1557
4. SIDEWALK SHALL BE AT LEAST 6" THICK BEHIND RESIDENTIAL DRIVEWAYS AND BEHIND ROLL-CURB AND 8" THICK BEHIND COMMERCIAL DRIVEWAYS.
5. THE FINISHED SIDEWALK SHALL BE SPRAYED WITH A TRANSPARENT CURING COMPOUND COVERED BY WATERPROOF PAPER OR PLASTIC SHEETING IN THE EVENT OF RAIN OR OTHER INCLEMENT WEATHER. CURING TIME SHALL BE FOR A MINIMUM OF 72 HOURS.
6. ALL JOINTS SHALL BE CLEANED AND EDGED WITH AN EDGER HAVING A 1/4" RADIUS.
7. SIDEWALK AND PLANTER STRIP WIDTHS SHALL CONFORM TO DIMENSIONS SHOWN IN APPROPRIATE STREET CROSS SECTION DETAIL.
8. EXPOSED SURFACES SHALL BE A LIGHT BROOM FINISH.
9. REPLACE ALL CURB FACE DRAINS.
10. INSTALL IRRIGATION SLEEVES FOR EACH INDIVIDUAL PLANTER AREA.
11. ALL CONCRETE SHALL INCLUDE ONE (1) POUND OF LAMPBLACK PER CUBIC YARD OF CONCRETE. SEE GENERAL NOTE 7 ON SHEET G-2.

3 / D1 SIDEWALK
NTS

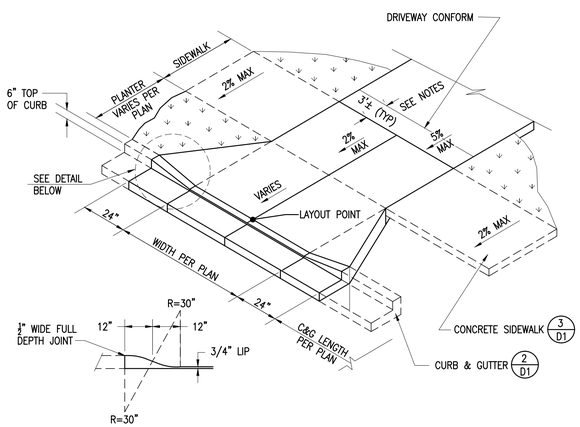

CURB TRANSITION DETAIL

NOTES:

1. WIDTH OF DRIVEWAY AT PROPERTY LINE, (14' MIN. - 30' MAX. RESIDENTIAL & 25' MIN. - 30' MAX. COMMERCIAL).
2. EXPANSION JOINTS SHALL BE 1/2" WIDE, FULL DEPTH.
3. DRIVEWAY CONCRETE SHALL BE A MIN. OF 6" THICK FOR RESIDENTIAL AND 8" THICK FOR COMMERCIAL AND IS TO BE PLACED ON A MINIMUM OF 6" CLASS 2 AGGREGATE BASE 95% MAXIMUM COMPACTION ASTM D1557, OVER COMPACTED SUBGRADE.
4. ALL WORK SHALL COMFORM TO CURRENT ADAAG REQUIREMENTS.
5. DRIVEWAY CONFORMS SHALL BE INSTALLED AS INDICATED ON PLANS.
6. ALL CONCRETE SHALL INCLUDE ONE (1) POUND OF LAMPBLACK PER CUBIC YARD OF CONCRETE. SEE GENERAL NOTE 7 ON SHEET G-2.

4 / D1 DRIVEWAY WITH PLANTER
NTS

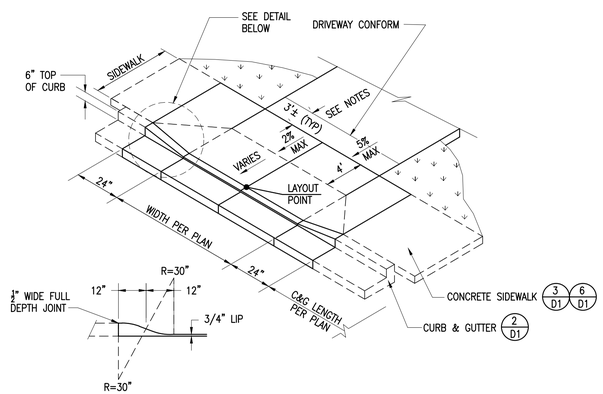

CURB TRANSITION DETAIL

NOTES:

1. WIDTH OF DRIVEWAY AT PROPERTY LINE, (14' MIN. - 30' MAX. RESIDENTIAL & 25' MIN. - 30' MAX. COMMERCIAL).
2. EXPANSION JOINTS SHALL BE 1/2" WIDE, FULL DEPTH.
3. DRIVEWAY CONCRETE SHALL BE A MIN. OF 6" THICK FOR RESIDENTIAL AND 8" THICK FOR COMMERCIAL AND IS TO BE PLACED ON A MINIMUM OF 6" CLASS 2 AGGREGATE BASE 95% MAXIMUM COMPACTION ASTM D1557, OVER COMPACTED SUBGRADE.
4. ALL WORK SHALL CONFORM TO CURRENT ADAAG REQUIREMENTS.
5. DRIVEWAY CONFORMS SHALL BE INSTALLED AS INDICATED ON PLANS.
6. ALL CONCRETE SHALL INCLUDE ONE (1) POUND OF LAMPBLACK PER CUBIC YARD OF CONCRETE. SEE GENERAL NOTE 7 ON SHEET G-2.

5 / D1 DRIVEWAY WITHOUT PLANTER
NTS

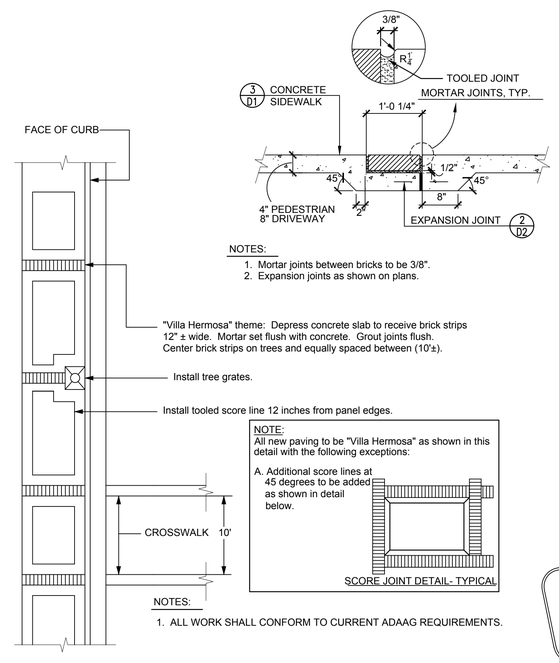

NOTES:

1. Mortar joints between bricks to be 3/8".
2. Expansion joints as shown on plans.

NOTE:
All new paving to be "Villa Hermosa" as shown in this detail with the following exceptions:

A. Additional score lines at 45 degrees to be added as shown in detail below.

NOTES:

1. ALL WORK SHALL CONFORM TO CURRENT ADAAG REQUIREMENTS.

6 / D1 VILLA HERMOSA SIDEWALK
NTS

ISSUED FOR BID
DATE: 1-5-16

Know what's below. Call before you dig.

NCE
501 Canal Blvd. Suite 1
Richmond, California 94804
(510) 215-3620

REGISTERED PROFESSIONAL ENGINEER FRANZ G. HAUTMAN No. C 64725 EXP. 06/30/17 CIVIL STATE OF CALIFORNIA

1/05/2016

#13-31 ALMOND GROVE STREET RECONSTRUCTION PHASE 1 (CONCRETE)

OWNER

TOWN OF LOS GATOS
110 EAST MAIN ST.
LOS GATOS, CA 95030

NO.	DATE	DESCRIPTION

PROJECT NO:	58.13.20
DESIGNED BY:	SEH
DRAWN BY:	SPT, JEH
CHECKED BY: JWN	DATE 12/28/15
DATE:	1/05/2016

This drawing is the property of NCE, including all patented and patentable features, and/or confidential information and its use is conditioned upon the user's agreement not to reproduce the drawing, in whole or part, nor the material described thereon, nor the use of the drawing for any purpose other than specifically permitted in writing by NCE.

SHEET TITLE

DETAILS

DRAWING

D1

SHEET 14 OF 18

File: P:\Active Projects\Los Gatos Town - 58\58.13.20 - Almond Grove District Street Reconstruction Project\CAD\Area\Streets\01-25 Details PCC.dwg | Layout: D1 | Printed on: Dec 28, 2016 @ 3:56pm | 10:57:20.0s (LMS Tech)

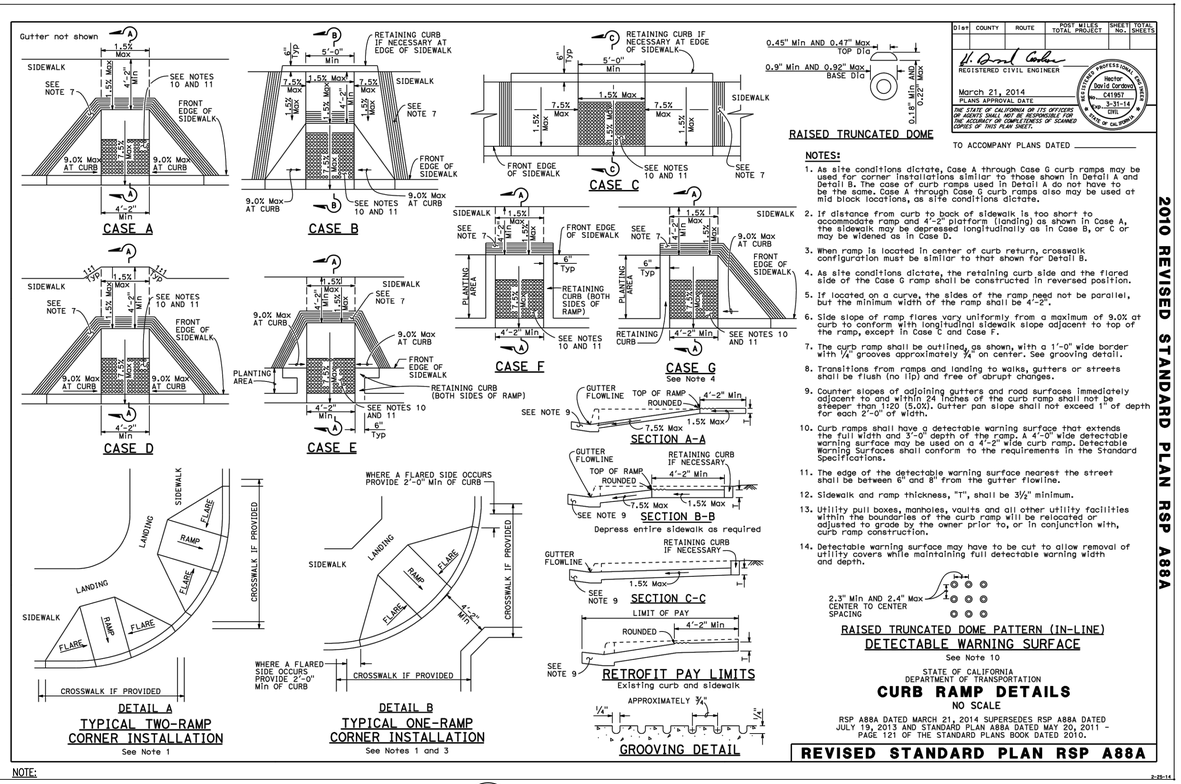

NOTES:

1. As site conditions dictate, Case A through Case G curb ramps may be used for corner installations similar to those shown in Detail A and Detail B. The case of curb ramps used in Detail A do not have to be the same. Case A through Case G curb ramps also may be used at mid block locations, as site conditions dictate.
2. If distance from curb to back of sidewalk is too short to accommodate ramp and 4'-2' platform (landing) as shown in Case A, the sidewalk may be depressed longitudinally as in Case B, or C or may be widened as in Case D.
3. When ramp is located in center of curb return, crosswalk configuration must be similar to that shown for Detail B.
4. As site conditions dictate, the retaining curb side and the flared side of the Case G ramp shall be constructed in reversed position.
5. If located on a curve, the sides of the ramp need not be parallel, but the minimum width of the ramp shall be 4'-2'.
6. Side slope of ramp flares vary uniformly from a maximum of 9.0% at curb to conform with longitudinal sidewalk slope adjacent to top of the ramp, except in Case C and Case F.
7. The curb ramp shall be outlined, as shown, with a 1'-0" wide border with 1/4" grooves approximately 3/4" on center. See grooving detail.
8. Transitions from ramps and landing to walks, gutters or streets shall be flush (no lip) and free of abrupt changes.
9. Counter slopes of adjoining gutters and road surfaces immediately adjacent to and within 24 inches of the curb ramp shall not be steeper than 1:20 (5.0%). Gutter pan slope shall not exceed 1" of depth for each 2'-0" of width.
10. Curb ramps shall have a detectable warning surface that extends the full width and 3'-0" depth of the ramp. A 4'-0" wide detectable warning surface may be used on a 4'-2" wide curb ramp. Detectable Warning Surfaces shall conform to the requirements in the Standard Specifications.
11. The edge of the detectable warning surface nearest the street shall be between 6" and 8" from the gutter flowline.
12. Sidewalk and ramp thickness, "T", shall be 3½" minimum.
13. Utility pull boxes, manholes, vaults and all other utility facilities within the boundaries of the curb ramp will be relocated or adjusted to grade by the owner prior to, or in conjunction with, curb ramp construction.
14. Detectable warning surface may have to be cut to allow removal of utility covers while maintaining full detectable warning width and depth.

NOTE:

DETECTABLE WARNING SURFACE SHALL BE AS SPECIFIED IN PROJECT TECHNICAL SPECIFICATIONS

1 / D2 CURB RAMP
NTS

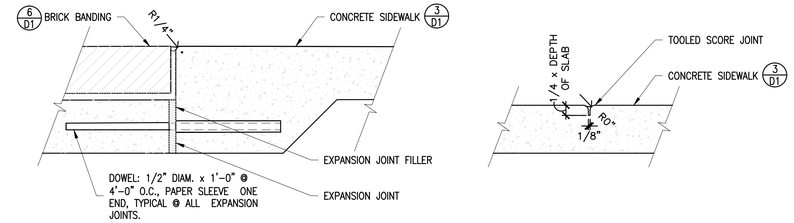

EXPANSION JOINT

TOOLED SCORE JOINT

NOTE:

BRICKS FOR VILLA HERMOSA PATTERN CONCRETE SIDEWALK SHALL BE MCNEAR WIRE-CUT RED SOLID JUMBO BRICK (3 1/2" x 3 1/2" x 11 1/2") OR AS APPROVED BY THE ENGINEER. BULLNOSE BRICKS FOR PLANTERS SHALL BE MCNEAR WIRE-CUT RED CORED BULLNOSE JUMBO BRICK (2 7/16" x 3 7/8" x 11 1/2").

MORTAR SHALL CONFORM TO ASTM C270, TYPE "M" PROPERTY SPECIFICATION, WITH 2500 PSI MIN. AT 28 DAYS. OMIT LIME PUTTY IF PLASTIC TYPE CEMENT IS USED. COLOR OF MORTAR SHALL BE MEDIUM BROWN #641, TRUE TONE CEMENT COLORS BY DAVIS COLORS, (800) 356-4848. MORTAR AGGREGATE SHALL CONFORM TO ASTM C144. GROUT AGGREGATE SHALL CONFORM TO ASTM C404. HYDRATED LIME SHALL CONFORM TO ASTM C207.

CONTRACTOR SHALL SUBMIT BRICK, BULLNOSE BRICK, AND GROUT SAMPLES TO ENGINEER FOR APPROVAL.

2 / D2 SIDEWALK JOINTING
NTS

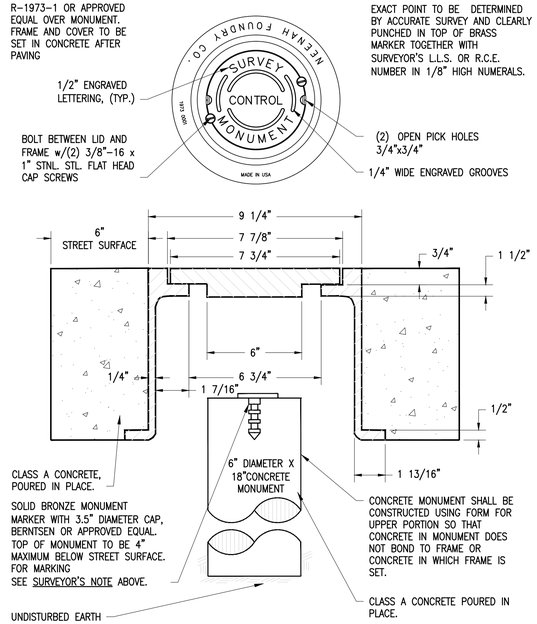

SOLID BRONZE MONUMENT MARKER WITH 3.5" DIAMETER CAP, BERNTSEN OR APPROVED EQUAL. TOP OF MONUMENT TO BE 4" MAXIMUM BELOW STREET SURFACE. FOR MARKING SEE SURVEYOR'S NOTE ABOVE.

SURVEYOR'S NOTE

EXACT POINT TO BE DETERMINED BY ACCURATE SURVEY AND CLEARLY PUNCHED IN TOP OF BRASS MARKER TOGETHER WITH SURVEYOR'S L.L.S. OR R.C.E. NUMBER IN 1/8" HIGH NUMERALS.

3 / D2 CENTERLINE MONUMENT
NTS

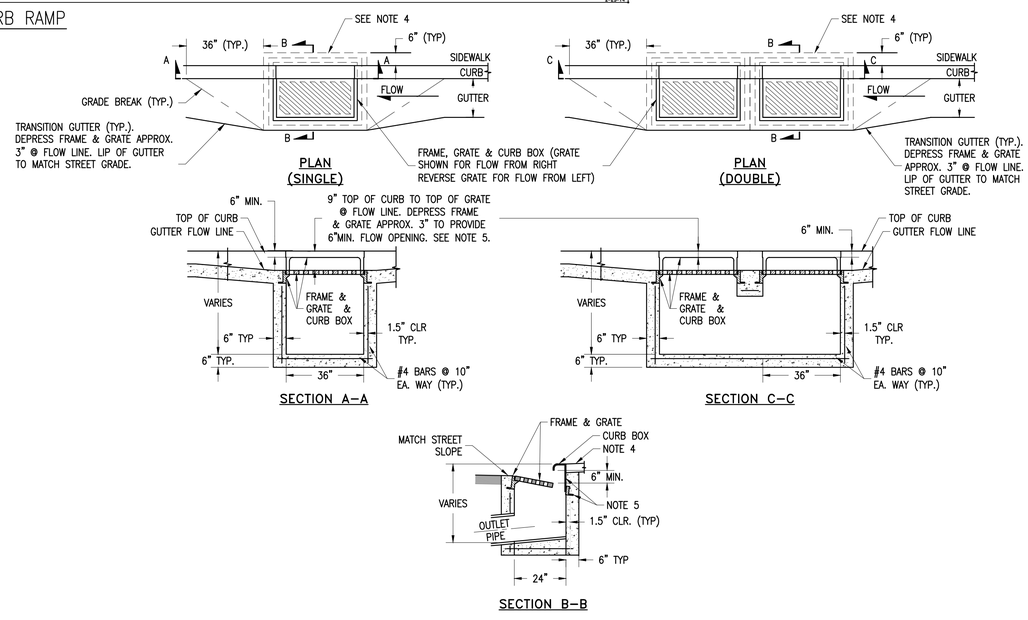

NOTES:

1. REINFORCED STEEL SHALL BE GRADE 40 AND HAVE 1.5" MINIMUM CLEAR COVER.
2. CONCRETE STRUCTURE MAY BE A PRE-CAST CONCRETE UNIT UPON APPROVAL OF THE TOWN. BASE OF PRE-CAST CONCRETE UNIT SHALL BE PLACED ON 6" COMPACTED DRAIN ROCK.
3. FRAME, GRATE & CURB BOX SHALL BE NEENAH R-3067 OR APPROVED EQUAL (WITH EQUAL FLOW CAPACITY AND WEIGHT.)
4. CONCRETE SHALL BE PLACED AS SHOWN WHEN NOT LOCATED IN A SIDEWALK.
5. TILT FRAME & GRATE AS REQUIRED TO ATTAIN 6" MIN FLOW OPENING & SHIM BETWEEN CURB BOX & FRAME AS REQUIRED TO MATCH CURB BOX TO TOP OF CURB AND FACE OF CURB (SEE SECTION B-B.)
6. CATCH BASINS SHALL ONLY BE CONNECTED TO MANHOLES OR CONNECTED TO STORM DRAIN MAINS BY LATERALS.

4 / D2 CURB INLET (SINGLE AND DOUBLE)
NTS

ISSUED FOR BID
DATE: 1-5-16

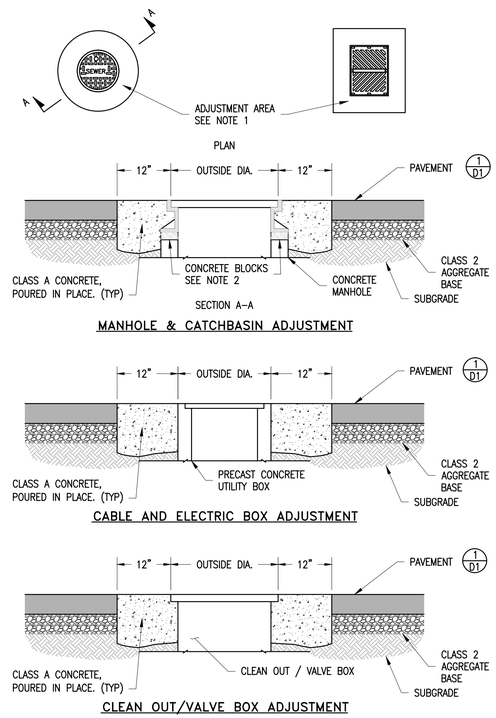

NOTES:

1. REMOVE PAVEMENT AND BASE MATERIALS FOR A DISTANCE WHICH IS EQUAL TO THE DIAMETER OF THE FRAME PLUS TWO FEET. ADJUST CASTING FRAME TO NEW PAVEMENT SURFACE USING CONCRETE BLOCKS.
2. 2"x4"x8" SOLID BRICK USED FOR FINAL ADJUSTMENT TO GRADE. 6" HIGH MAX.
3. INSTALL BLOCKOUT USING SONOTUBE. RAISE TO GRADE AFTER PAVING OPERATIONS ARE COMPLETED.

5 / D2 UTILITY ADJUSTMENT
NTS

Know what's below. Call before you dig.

NCE
501 Canal Blvd. Suite 1
Richmond, California 94804
(510) 215-3620

REGISTERED PROFESSIONAL ENGINEER FRANZ G. HALDIMANN No. C 64725 EXP. 06/30/17 CIVIL STATE OF CALIFORNIA

1/05/2016

#13-31 ALMOND GROVE STREET RECONSTRUCTION PHASE 1 (CONCRETE)

OWNER

TOWN OF LOS GATOS
110 EAST MAIN ST.
LOS GATOS, CA 95030

NO.	DATE	DESCRIPTION

PROJECT NO:	58.13.20
DESIGNED BY:	SEH
DRAWN BY:	SPT, JEH
CHECKED BY: JWN	DATE 12/28/15
DATE:	1/05/2016

This drawing is the property of NCE, including all patented and patentable features, and/or confidential information and its use is conditioned upon the user's agreement not to reproduce the drawing, in whole or part, nor the material described thereon, nor the use of the drawing for any purpose other than specifically permitted in writing by NCE.

SHEET TITLE

DETAILS

DRAWING

D2

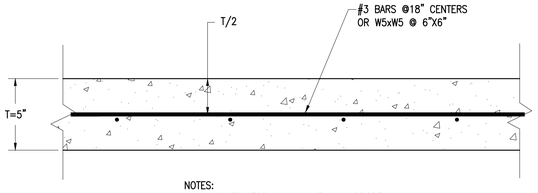

NOTES:
1. CONTRACTOR SHALL INSTALL SUPPORTS (CHAIRS, TIES, PINS, ETC.) AS NECESSARY TO ENSURE REINFORCEMENT IS LOCATED IN THE MIDDLE OF THE SLAB PER DETAIL.
2. ALL IRREGULAR SHAPED SLABS AND SLABS WITH A LENGTH-TO-WIDTH RATIO EXCEEDING 1.25 SHALL BE REINFORCED.

1/D3 PCC REINFORCING DETAIL
NTS

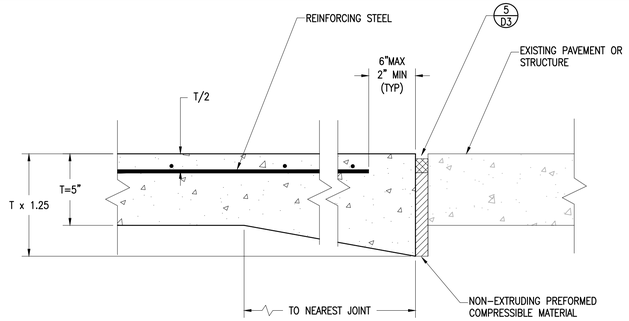

2/D3 THICKENED EDGE ISOLATION JOINT
NTS

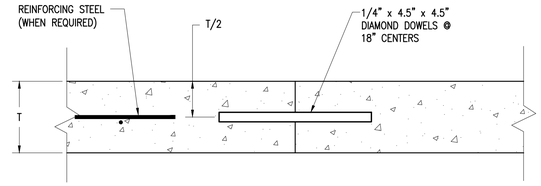

NOTES:
1. CONTRACTOR SHALL INSTALL LONGITUDINAL DOWELED CONSTRUCTION JOINTS PER APPROVED PAVING PLAN AND TRANSVERSE DOWELED CONSTRUCTION JOINTS WHERE PAVING OPERATIONS ARE DELAYED OR STOPPED.
2. ALL OTHER JOINTS SHALL BE SAWCUT 1/8" WIDE TO A DEPTH OF T/3. JOINTS SHALL BE UNSEALED.

3/D3 DOWELED CONSTRUCTION JOINT
NTS

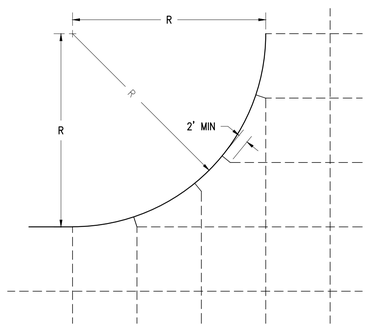

NOTES:
1. ALL CONSTRUCTION AND CONTRACTION JOINTS SHALL BE SAWCUT 1/8" WIDE TO A DEPTH OF T/3. JOINTS SHALL BE UNSEALED.

4/D3 TYPICAL FILLET DETAIL
NTS

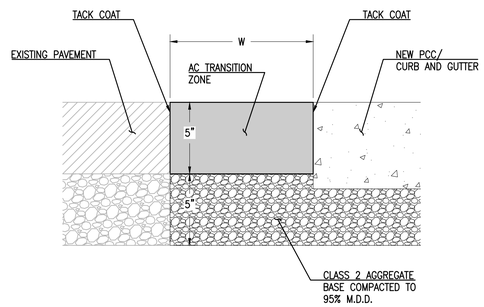

NOTES:
1. "W" SHALL BE 3' MINIMUM ADJACENT TO PCC PAVEMENT OR 2' ADJACENT TO CURB AND GUTTER AS DIRECTED.

7/D3 ASPHALT TRANSITION
NTS

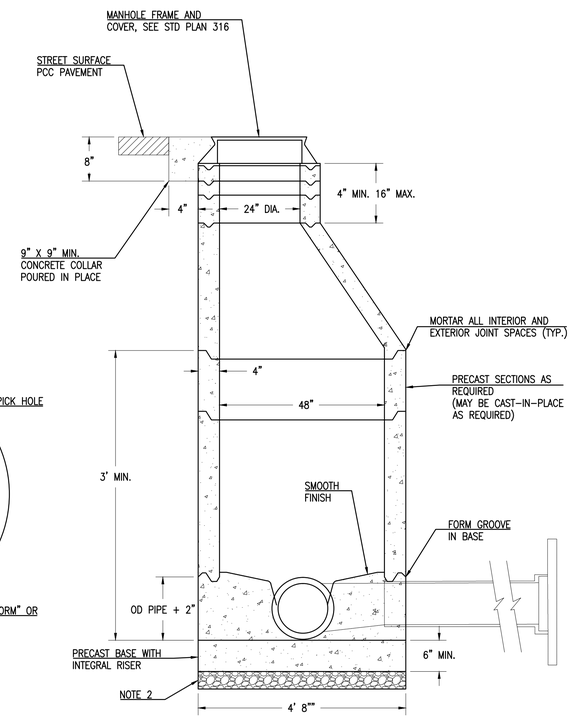

NOTES:
1. PRECAST M.H. SECTIONS SHALL CONFORM TO APPLICABLE PROVISIONS OF ASTM C478.
2. 9" CLASS 2 FOR AGGREGATE BASE BEDDING COMPACTED TO 95% MAX. ASTM D1557.
3. STEPS SHALL BE GALV. STEEL ¾" DIA., INSERTED 3" MIN.
4. ALL JOINTS WITH FLEXIBLE PLASTIC JOINT COMPOUND (RAM-NECK, QUICK SEAL, OR EQUAL). TWO LAYERS MAY BE REQUIRED TO SEAL BASE. PLASTER WITH MORTAR THEREAFTER.
5. MANHOLE BASE MUST BE POURED AGAINST UNDISTURBED SOIL. IF EXCAVATED TOO DEEP, FILL WITH CONCRETE.

9/D3 SD MANHOLE
NTS

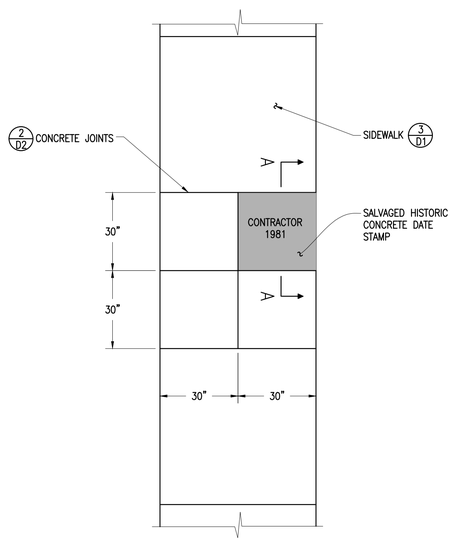

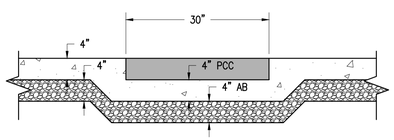

SECTION A-A
NTS

NOTES:
1. HISTORIC CONCRETE DATE STAMPS SHALL BE SAWCUT, REMOVED, SALVAGED, AND THEN RESET NEAR THEIR ORIGINAL LOCATIONS. CONTRACTOR TO INVENTORY CONCRETE DATE STAMPS AND SUBMIT INVENTORY TO OWNER.
2. STAMP SHALL BE SAWCUT AND SALVAGED AS ONE 2'6"x2'6" SQUARE.
3. STAMP SHALL BE WET SET IN NEW SIDEWALK WITH 4" OF ADDITIONAL CONCRETE REQUIRED UNDERNEATH STAMP.

6/D3 HISTORIC CONCRETE DATE STAMP
NTS

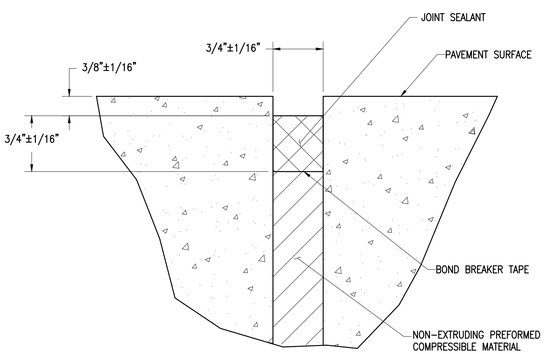

5/D3 EXPANSION JOINT
NTS

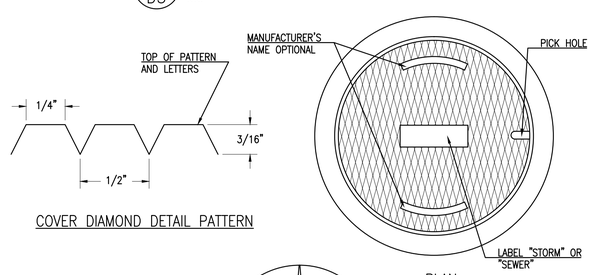

COVER DIAMOND DETAIL PATTERN

PLAN

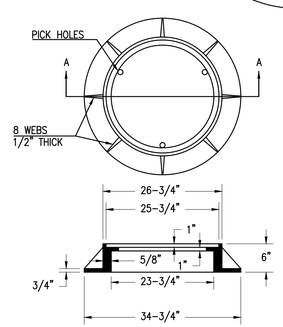

SECTION A-A

8/D3 MANHOLE FRAME AND COVER
NTS

ISSUED FOR BID
DATE: 1-5-16

Know what's below. Call before you dig.

NCE
501 Canal Blvd. Suite 1
Richmond, California 94804
(510) 215-3620

REGISTERED PROFESSIONAL ENGINEER
FRANZ G. HALDIMANN
No. C 64725
EXP. 06/30/17
CIVIL
STATE OF CALIFORNIA

1/05/2016

#13-31 ALMOND GROVE STREET RECONSTRUCTION PHASE 1 (CONCRETE)

OWNER

TOWN OF LOS GATOS
110 EAST MAIN ST.
LOS GATOS, CA 95030

NO.	DATE	DESCRIPTION

PROJECT NO:	58.13.20
DESIGNED BY:	SEH
DRAWN BY:	SPT, JEH
CHECKED BY: JWN	DATE 12/28/15
DATE:	1/05/2016

This drawing is the property of NCE, including all patented and patentable features, and/or confidential information and its use is conditioned upon the user's agreement not to reproduce the drawing, in whole or part, nor the material described thereon, nor the use of the drawing for any purpose other than specifically permitted in writing by NCE.

SHEET TITLE

DETAILS

DRAWING

D3

SHEET 16 OF 18

File: P:\Active Projects\Los Gatos Town - 58.13.20 - Almond Grove District Street Reconstruction Project\CAD\Dwg\Sheets\D1-D5 Details PCC.dwg | Layout: D3 | Printed Jan 06, 2016 @ 4:05pm | 05.17.20.2b (LMS Tech)

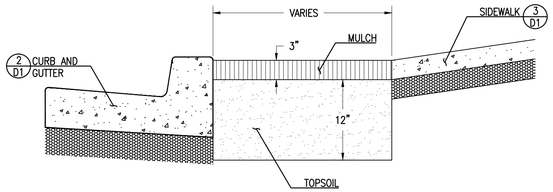

NOTES:

1. REPLACE ALL CURB FACE DRAINS.
2. INSTALL IRRIGATION SLEEVES FOR EACH INDIVIDUAL PLANTER AREA.
3. PLANTER STRIP TO BE FILLED WITH TOP SOIL. TOP 3" TO BE MULCH.

1/D4 PLANTER SOFTSCAPE
NTS

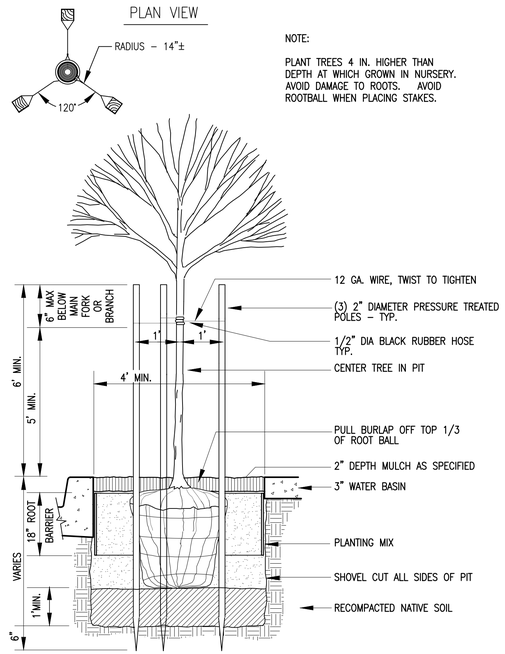

NOTE:

PLANT TREES 4 IN. HIGHER THAN DEPTH AT WHICH GROWN IN NURSERY. AVOID DAMAGE TO ROOTS. AVOID ROOTBALL WHEN PLACING STAKES.

2/D4 TREE PLANTING
NTS

TREE SPECIFICATIONS:

ALL 24 IN. BOX TREES MUST MEET THE FOLLOWING MINIMUM SPECIFICATIONS:

1. HEIGHT: 9 – 13 FEET HIGH PLANTED IN THE GROUND.
2. CALIPER: 1–1/2 INCHES, MEASURED 6 INCHES FROM THE BASE.
3. BRANCHING NEED: MINIMUM SPREAD OF 2 – 3 FEET.

ANY EXCEPTION TO THE ABOVE MUST BE APPROVED BY THE TOWN ARBORIST.

ALL PLANTING STOCK MUST MUST HAVE THE APPROVAL OF THE TOWN ARBORIST.

PLANTING SEQUENCE:

1. DIG THE HOLE TWICE AS LARGE IN DIAMETER AND 1–1/2 TIMES AS DEEP AS THE CONTAINER IN WHICH THE PLANT WAS DELIVERED. PROVIDE A 6 INCH MINIMUM CLEARANCE ALL AROUND THE ROOTBALL.
2. THE EXISTING SOIL AREA IS TO BE REMOVED TO A DEPTH OF 2 FEET AND REPLACED WITH U.C. AG. MIX OR APPROVED EQUIVALENT. U.C. AG. MIX SHALL BE COMBINED WITH EXISTING SOIL, 1/3 MIX, 2/3 NATIVE SOIL.
3. FILL HOLE WITH THE BACKFILL MIX TO A LEVEL 1 INCH BELOW THE CURB.
4. PLACE 3 AGRIFORM PLANTING TABLETS PER TREE AT EQUIDISTANT SPACING. TABLETS SHALL BE 21 GRAMS EACH WITH A GUARANTEED TEST ANALYSIS OF 20–10–5.
5. REMOVE THE ROOTBALL CAREFULLY FROM THE CONTAINER BY SUPPORTING IT FROM BELOW. SEVER ANY CIRCLING ROOTS (3/16 INCH OR GREATER) WITH SHARP SHEARS OR KNIFE. IF THE ROOTBALL IS DENSE OR COMPACTED, CAREFULLY LOOSEN THE ROOTS AT THE SIDE AND BOTTOM OF THE ROOTBALL. DO NOT PULL THE ROOTBALL APART. THE SEVERING OF LARGE ROOTS WILL ENCOURAGE NEW ROOTS INITIATING AT THE CUTS.
6. FILL AROUND THE ROOTBALL WITH BACKFILL AND PACK THE SOIL WITH THE SHOVEL HANDLE AS YOU FILL. BE CAREFUL NOT TO DISTURB THE ROOTBALL ITSELF.
7. USE THE REMAINING NATIVE SOIL TO CREATE A BASIN APPROPRIATE TO THE SITE.

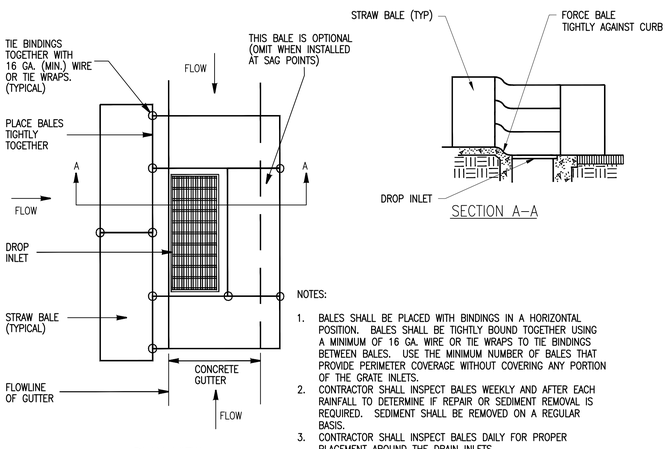

NOTES:

1. BALES SHALL BE PLACED WITH BINDINGS IN A HORIZONTAL POSITION. BALES SHALL BE TIGHTLY BOUND TOGETHER USING A MINIMUM OF 16 GA. WIRE OR TIE WRAPS TO TIE BINDINGS BETWEEN BALES. USE THE MINIMUM NUMBER OF BALES THAT PROVIDE PERIMETER COVERAGE WITHOUT COVERING ANY PORTION OF THE GRATE INLETS.
2. CONTRACTOR SHALL INSPECT BALES WEEKLY AND AFTER EACH RAINFALL TO DETERMINE IF REPAIR OR SEDIMENT REMOVAL IS REQUIRED. SEDIMENT SHALL BE REMOVED ON A REGULAR BASIS.
3. CONTRACTOR SHALL INSPECT BALES DAILY FOR PROPER PLACEMENT AROUND THE DRAIN INLETS.
4. BALES SHALL BE REPLACED WHEN THEY HAVE BEEN DAMAGED, COLLAPSED OR DECOMPOSED.

3/D4 STRAW BALE INLET FILTER
NTS

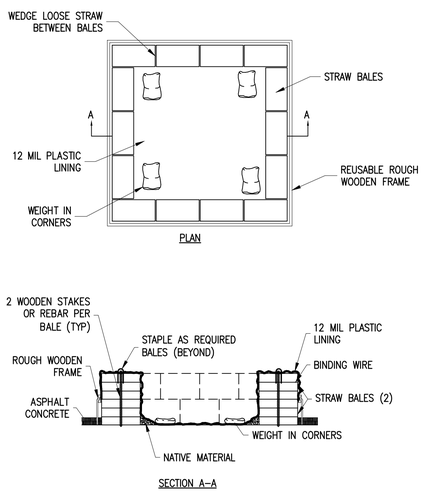

4/D4 CONCRETE WASHOUT
NTS

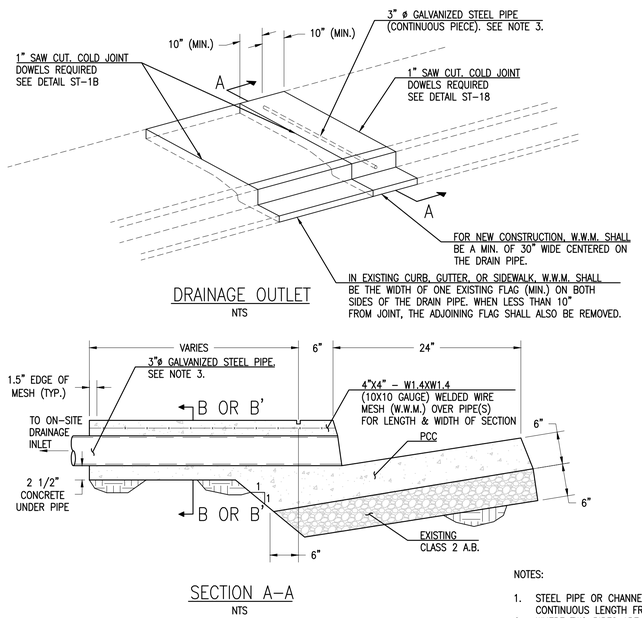

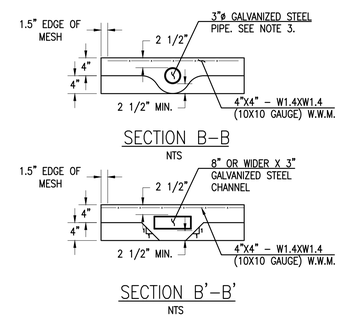

NOTES:

1. STEEL PIPE OR CHANNEL SHALL BE ONE CONTINUOUS LENGTH FROM PROPERTY LINE.
2. WHERE TWO PIPES ARE ALLOWED, PIPE SPACING SHALL MAINTAIN A MINIMUM CLEAR DISTANCE OF TWO (2) INCHES
3. WHERE THREE OR MORE PIPES ARE REQUIRED, A RECTANGULAR 8" OR WIDER X 3" GALVANIZED STEEL CHANNEL SHALL BE USED, AND SHALL MAINTAIN THE MINIMUM CLEAR DISTANCES. SEE SECTION B'–B'.
4. CURB FACE DRAIN OUTLET MAY BE USED ONLY AT LOCATIONS APPROVED BY THE TOWN.

5/D4 SIDEWALK DRAIN REPLACEMENT
NTS

ISSUED FOR BID
DATE: 1-5-16

811 Know what's below. Call before you dig.

NCE
501 Canal Blvd. Suite 1
Richmond, California 94804
(510) 215-3620

REGISTERED PROFESSIONAL ENGINEER FRANZ G. HALDIMANN No. C 64725 EXP. 06/30/17 CIVIL STATE OF CALIFORNIA
1/05/2016

#13-31 ALMOND GROVE STREET RECONSTRUCTION PHASE 1 (CONCRETE)

OWNER

TOWN OF LOS GATOS
110 EAST MAIN ST.
LOS GATOS, CA 95030

NO.	DATE	DESCRIPTION

PROJECT NO:	58.13.20
DESIGNED BY:	SEH
DRAWN BY:	SPT, JEH
CHECKED BY: JWN	DATE 12/28/15
DATE:	1/05/2016

This drawing is the property of NCE, including all patented and patentable features, and/or confidential information and its use is conditioned upon the user's agreement not to reproduce the drawing, in whole or part, nor the material described thereon, nor the use of the drawing for any purpose other than specifically permitted in writing by NCE.

SHEET TITLE

DETAILS

DRAWING

D4

SHEET 17 OF 18

File: P:\Active Projects\Los Gatos Town - 58\58.13.20 - Almond Grove District Street Reconstruction Project\CAD\dwg\Sheets\D1-D5 Details PCC.dwg | Layout: D4 | Printed Jan 06, 2016 @ 4:05pm | 6.57.20.0 (LMS Tech)

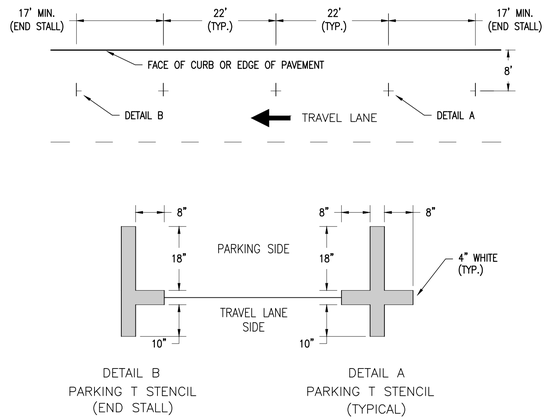

NOTES:

1. TYPICAL PARALLEL PARKING STALL IS 8'-WIDE 22'-LONG. END PARKING STALL LENGTH MAY BE REDUCED TO 17' MINIMUM.
2. PARKING STALL WIDTH, IF APPROVED BY ENGINEER, MAY BE REDUCED TO 7' MINIMUM FOR NARROW LOW VOLUME MINOR STREETS TO MAINTAIN DESIRED TRAVEL LANE WIDTH.

1 D5 PARKING T
NTS

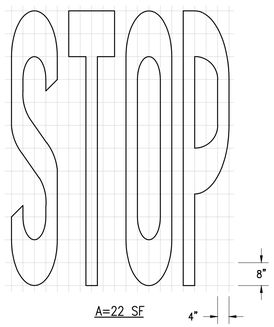

2 D5 "STOP" MARKING
NTS

SOURCE: CALTRANS STANDARD PLANS "PAVEMENT MARKINGS WORDS" A24D

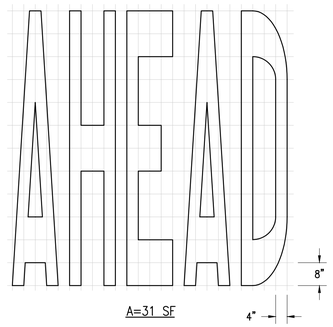

3 D5 "AHEAD" MARKING
NTS

SOURCE: CALTRANS STANDARD PLANS "PAVEMENT MARKINGS WORDS" A24D

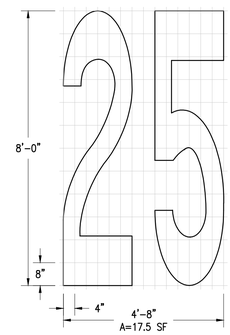

4 D5 "25" MARKING
NTS

SOURCE: CALTRANS STANDARD PLANS "PAVEMENT MARKERS AND TRAFFIC LINES TYPICAL DETAILS" A20A

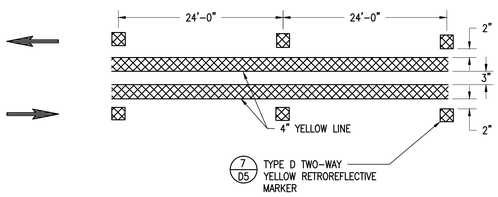

5 D5 CALTRANS DETAIL 22
NTS

SOURCE: CALTRANS STANDARD PLANS "PAVEMENT MARKERS AND TRAFFIC LINES TYPICAL DETAILS" A20A

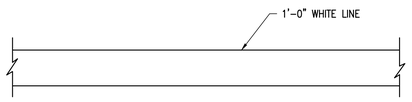

6 D5 LIMIT LINE
NTS

SOURCE: CALTRANS STANDARD PLANS "PAVEMENT MARKINGS WORDS, LIMIT AND YIELD LINES" A24E

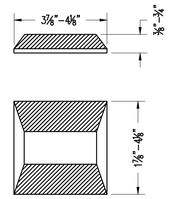

TYPE D

7 D5 MARKER DETAIL
NTS

SOURCE: CALTRANS STANDARD PLANS "PAVEMENT MARKINGS SYMBOLS AND NUMERALS" A24C

ISSUED FOR BID
DATE: 1-5-16

811 Know what's below. Call before you dig.

NCE
501 Canal Blvd. Suite 1
Richmond, California 94804
(510) 215-3620

REGISTERED PROFESSIONAL ENGINEER FRANZ G. HAIDINGER NO. C 64725 EXP. 06/30/17 CIVIL STATE OF CALIFORNIA
1/05/2016

#13-31 ALMOND GROVE STREET RECONSTRUCTION PHASE 1 (CONCRETE)

OWNER

TOWN OF LOS GATOS
110 EAST MAIN ST.
LOS GATOS, CA 95030

NO.	DATE	DESCRIPTION

PROJECT NO:	58.13.20
DESIGNED BY:	SEH
DRAWN BY:	SPT, JEH
CHECKED BY: JWN	DATE 12/28/15
DATE:	1/05/2016

This drawing is the property of NCE, including all patented and patentable features, and/or confidential information and its use is conditioned upon the user's agreement not to reproduce the drawing, in whole or part, nor the material described thereon, nor the use of the drawing for any purpose other than specifically permitted in writing by NCE.

SHEET TITLE

DETAILS

DRAWING

D5