IMPROVEMENT PLANS
for
YURI FARMS

14790 OKA ROAD, LOS GATOS, CA 95032

AERIAL

CONDITIONS OF APPROVAL

1. A BUILDING PERMIT IS REQUIRED FOR THE CONSTRUCTION OF A NEW AGRICULTURAL STORAGE BUILDING.
2. THE CURRENT CODES, AS AMENDED AND ADOPTED BY THE TOWN OF LOS GATOS AS OF JANUARY 1, 2020, ARE THE 2019 CALIFORNIA BUILDING STANDARDS CODE, CALIFORNIA CODE OF REGULATIONS TITLE 24, PARTS 1-12.
3. THE CONDITIONS OF APPROVAL MUST BE BLUE-LINED IN FULL ON THE COVER SHEET OF THE CONSTRUCTION PLANS. A COMPLIANCE MEMORANDUM SHALL BE PREPARED AND SUBMITTED WITH THE BUILDING PERMIT APPLICATION DETAILING HOW THE CONDITIONS OF APPROVAL WILL BE ADDRESSED.
4. SUBMIT REQUESTS FOR NEW BUILDING ADDRESSES TO THE BUILDING DIVISION PRIOR TO SUBMITTING FOR THE BUILDING PERMIT APPLICATION PROCESS.
5. GROUP U OCCUPANCY DOES NOT REQUIRE SOILS REPORT UNLESS REQUIRED BY EOR.
6. SHORING PLANS AND CALCULATIONS WILL BE REQUIRED FOR ALL EXCAVATIONS WHICH EXCEED FIVE (5) FEET IN DEPTH OR WHICH REMOVE LATERAL SUPPORT FROM ANY EXISTING BUILDING, ADJACENT PROPERTY, OR THE PUBLIC RIGHT-OF-WAY. SHORING PLANS AND CALCULATIONS SHALL BE PREPARED BY A CALIFORNIA LICENSED ENGINEER AND SHALL CONFIRM TO THE CAL/OSHA REGULATIONS.
7. A PAD CERTIFICATE PREPARED BY A LICENSED CIVIL ENGINEER OR LAND SURVEYOR SHALL BE SUBMITTED TO THE PROJECT BUILDING INSPECTOR AT FOUNDATION INSPECTION. THIS CERTIFICATE SHALL CERTIFY COMPLIANCE WITH THE RECOMMENDATIONS AS SPECIFIED IN THE SOILS REPORT, AND THAT THE BUILDING PAD ELEVATIONS AND ON-SITE RETAINING WALL LOCATIONS AND ELEVATIONS HAVE BEEN PREPARED ACCORDING TO THE APPROVED PLANS. HORIZONTAL AND VERTICAL CONTROLS SHALL BE SET AND CERTIFIED BY A LICENSED SURVEYOR OR REGISTERED CIVIL ENGINEER FOR THE FOLLOWING ITEMS:
   - A. BUILDING PAD ELEVATION
   - B. FINISH FLOOR ELEVATION
   - C. FOUNDATION CORNER LOCATIONS
   - D. RETAINING WALL(S) LOCATIONS AND ELEVATIONS
8. ALL REQUIRED CALIFORNIA TITLE 24 ENERGY COMPLIANCE FORMS MUST BE BLUE-LINED (STICKY-BACKED), I.E. DIRECTLY PRINTED, ONTO A PLAN SHEET.
9. ALL PROJECTS IN THE TOWN OF LOS GATOS REQUIRE CLASS A ROOF ASSEMBLIES.
10. WILDLAND-URBAN INTERFACE: THIS PROJECT IS LOCATED IN A WILDLAND-URBAN INTERFACE HIGH FIRE AREA AND MUST COMPLY WITH SECTION R337 OF THE 2016 CALIFORNIA RESIDENTIAL CODE, PUBLIC RESOURCES CODE 4291 AND CALIFORNIA GOVERNMENT CODE SECTION 51182.
11. SPECIAL INSPECTIONS: WHEN A SPECIAL INSPECTION IS REQUIRED BY CBC SECTION 1704, THE ARCHITECT OR ENGINEER OF RECORD SHALL PREPARE AN INSPECTION PROGRAM THAT SHALL BE SUBMITTED TO THE BUILDING OFFICIAL FOR APPROVAL PRIOR TO ISSUANCE OF THE BUILDING PERMIT. THE TOWN SPECIAL INSPECTION FORM MUST BE COMPLETELY FILLED-OUT AND SIGNED BY ALL REQUESTED PARTIES PRIOR TO PERMIT ISSUANCE. SPECIAL INSPECTION FORMS ARE AVAILABLE FROM THE BUILDING DIVISION SERVICE COUNTER OR ONLINE AT WWW.LOSGATOSCA.GOV/BUILDING.
12. BLUE PRINT FOR A CLEAN BAY SHEET: THE TOWN STANDARD SANTA CLARA VALLEY NONPOINT SOURCE POLLUTION CONTROL PROGRAM SHEET (PAGE SIZE SAME AS SUBMITTED DRAWINGS) SHALL BE PART OF THE PLAN SUBMITTAL AS THE SECOND PAGE. THE SPECIFICATION SHEET IS AVAILABLE AT THE BUILDING DIVISION SERVICE COUNTER FOR A FEE OF $2 OR AT ARC BLUE PRINT FOR A FEE OR ONLINE AT WWW.LOSGATOSCA.GOV/BUILDING.
13. APPROVALS REQUIRED: THE PROJECT REQUIRES THE FOLLOWING DEPARTMENTS AND AGENCIES APPROVAL BEFORE ISSUING A BUILDING PERMIT:
   - E. COMMUNITY DEVELOPMENT – PLANNING DIVISION: (408) 354-6874
   - F. ENGINEERING/PARKS & PUBLIC WORKS DEPARTMENT: (408) 399-5771
   - G. SANTA CLARA COUNTY FIRE DEPARTMENT: (408) 378-4010
   - H. WEST VALLEY SANITATION DISTRICT: (408) 378-2407
   - I. LOCAL SCHOOL DISTRICT: THE TOWN WILL FORWARD THE PAPERWORK TO THE APPROPRIATE SCHOOL DISTRICT(S) FOR PROCESSING. A COPY OF THE PAID RECEIPT IS REQUIRED PRIOR TO PERMIT ISSUANCE.

TOWN OF LOS GATOS GENERAL NOTES

1. ALL WORK SHALL CONFORM TO THE APPLICABLE TOWN ORDINANCES. THE OWNER OR APPLICANT'S REPRESENTATIVE IN CHARGE SHALL BE AT THE JOB SITE DURING ALL WORKING HOURS.
2. THIS APPLICATION SHALL BE COMPLETED IN ACCORDANCE WITH ALL THE CONDITIONS OF APPROVAL LISTED BELOW AND IN SUBSTANTIAL COMPLIANCE WITH THE LATEST REVIEWED AND APPROVED DEVELOPMENT PLANS. ANY CHANGES OR MODIFICATIONS TO THE APPROVED PLANS OR CONDITIONS OF APPROVALS SHALL BE APPROVED BY THE TOWN ENGINEER.
3. THE OWNER, APPLICANT OR THEIR REPRESENTATIVE SHALL NOTIFY THE ENGINEERING INSPECTOR AT LEAST TWENTY-FOUR (24) HOURS BEFORE STARTING ANY WORK PERTAINING TO ON-SITE DRAINAGE FACILITIES OR PAVING, AND ALL WORK IN THE TOWN'S RIGHT-OF-WAY. FAILURE TO DO SO WILL RESULT IN PENALTIES AND REJECTION OF ANY WORK THAT OCCURRED WITHOUT INSPECTION.
4. THE OWNER, APPLICANT OR THEIR REPRESENTATIVE SHALL REPAIR OR REPLACE ALL EXISTING IMPROVEMENTS NOT DESIGNATED FOR REMOVAL THAT ARE DAMAGED OR REMOVED BECAUSE OF THE OWNER, APPLICANT OR THEIR REPRESENTATIVE'S OPERATIONS. IMPROVEMENTS SUCH AS, BUT NOT LIMITED TO: CURBS, GUTTERS, SIDEWALKS, DRIVEWAYS, SIGNS, PAVEMENTS, RAISED PAVEMENT MARKERS, THERMOPLASTIC PAVEMENT MARKINGS, ETC., SHALL BE REPAIRED AND REPLACED TO A CONDITION EQUAL TO OR BETTER THAN THE ORIGINAL CONDITION. ANY NEW CONCRETE SHALL BE FREE OF STAMPS, LOGOS, NAMES, GRAFFITI, ETC. ANY CONCRETE IDENTIFIED THAT IS DISPLAYING A STAMP OR EQUAL SHALL BE REMOVED AND REPLACED AT THE CONTRACTOR'S SOLE EXPENSE AND NO ADDITIONAL COMPENSATION SHALL BE ALLOWED THEREFORE. EXISTING IMPROVEMENT TO BE REPAIRED OR REPLACED SHALL BE AT THE DIRECTION OF THE ENGINEERING CONSTRUCTION INSPECTOR AND SHALL COMPLY WITH ALL TITLE 24 DISABLED ACCESS PROVISIONS. THE RESTORATION OF ALL IMPROVEMENTS IDENTIFIED BY THE ENGINEERING CONSTRUCTION INSPECTOR SHALL BE COMPLETED BEFORE THE ISSUANCE OF A CERTIFICATE OF OCCUPANCY. THE OWNER, APPLICANT OR THEIR REPRESENTATIVE SHALL REQUEST A WALK-THROUGH WITH THE ENGINEERING CONSTRUCTION INSPECTOR BEFORE THE START OF CONSTRUCTION TO VERIFY EXISTING CONDITIONS.
5. THE GENERAL CONTRACTOR SHALL PROVIDE QUALIFIED SUPERVISION ON THE JOB SITE AT ALL TIMES DURING CONSTRUCTION.
6. ANY PROPOSED CHANGES TO THE APPROVED PLANS SHALL BE SUBJECT TO THE APPROVAL OF THE TOWN PRIOR TO THE COMMENCEMENT OF ANY AND ALL ALTERED WORK. THE OWNER, OR APPLICANT'S PROJECT ENGINEER SHALL NOTIFY, IN WRITING, THE TOWN ENGINEER AT LEAST SEVENTY-TWO (72) HOURS IN ADVANCE OF ALL THE PROPOSED CHANGES. ANY APPROVED CHANGES SHALL BE INCORPORATED INTO THE FINAL "AS-BUILT" PLANS.
7. ANY STUDIES IMPOSED BY THE PLANNING COMMISSION OR TOWN COUNCIL SHALL BE FUNDED BY THE OWNER OR APPLICANT.
8. AGREEMENTS DETAILING RIGHTS, LIMITATIONS AND RESPONSIBILITIES OF INVOLVED PARTIES SHALL ACCOMPANY ANY PROPOSED PRIVATE EASEMENT. ACCESS DRIVEWAY SHALL BE WITHIN THE RECORDED ACCESS EASEMENT. A NEW PRIVATE ACCESS EASEMENT SHALL BE RECORDED, AND A COPY OF THE RECORDED AGREEMENT SHALL BE SUBMITTED TO THE ENGINEERING DIVISION OF THE PARKS AND PUBLIC WORKS DEPARTMENT, PRIOR TO ISSUANCE OF A GRADING OR BUILDING PERMIT OR REALIGNED ACCESS DRIVEWAY SHALL BE COMPLETED PRIOR TO THE ISSUANCE OF BUILDING PERMIT.
9. CONSTRUCTION VEHICLE PARKING WITHIN THE PUBLIC RIGHT-OF-WAY WILL ONLY BE ALLOWED IF IT DOES NOT CAUSE ACCESS OR SAFETY PROBLEMS AS DETERMINED BY THE TOWN.
10. HAULING OF SOIL ON- OR OFF-SITE SHALL NOT OCCUR DURING THE MORNING OR EVENING PEAK PERIODS (BETWEEN 7:00 A.M. AND 9:00 A.M. AND BETWEEN 4:00 P.M. AND 6:00 P.M.), AND AT OTHER TIMES AS SPECIFIED BY THE DIRECTOR OF PARKS AND PUBLIC WORKS. PRIOR TO THE ISSUANCE OF A GRADING OR BUILDING PERMIT, THE OWNER, APPLICANT OR THEIR REPRESENTATIVE SHALL WORK WITH THE TOWN BUILDING DEPARTMENT AND ENGINEERING DIVISION INSPECTORS TO DEVISE A TRAFFIC CONTROL PLAN TO ENSURE SAFE AND EFFICIENT TRAFFIC FLOW UNDER PERIODS WHEN SOIL IS HAULED ON OR OFF THE PROJECT SITE. THIS MAY INCLUDE, BUT IS NOT LIMITED TO PROVISIONS FOR THE OWNER, OR APPLICANT TO PLACE CONSTRUCTION NOTIFICATION SIGNS NOTING THE DATES AND TIME OF CONSTRUCTION AND HAULING ACTIVITIES, OR PROVIDING ADDITIONAL TRAFFIC CONTROL. COORDINATION WITH OTHER SIGNIFICANT PROJECTS IN THE AREA MAY ALSO BE REQUIRED. COVER ALL TRUCKS HAULING SOIL, SAND AND OTHER LOOSE DEBRIS.
11. ALL CONSTRUCTION ACTIVITIES, INCLUDING THE DELIVERY OF CONSTRUCTION MATERIALS, LABORS, HEAVY EQUIPMENT, SUPPLIES, ETC., SHALL BE LIMITED TO THE HOURS OF 8:00 A.M. TO 8:00 P.M., WEEKDAYS AND 9:00 A.M. TO 7:00 P.M. WEEKENDS AND HOLIDAYS. THE TOWN MAY AUTHORIZE, ON A CASE-BY-CASE BASIS, ALTERNATE CONSTRUCTION HOURS. THE OWNER OR APPLICANT SHALL PROVIDE WRITTEN NOTICE TWENTY-FOUR (24) HOURS IN ADVANCE OF MODIFIED CONSTRUCTION HOURS. APPROVAL OF THIS REQUEST IS AT DISCRETION OF THE TOWN.
12. BETWEEN THE HOURS OF 8:00 A.M. TO 8:00 P.M., WEEKDAYS AND 9:00A.M. TO 7:00 P.M. WEEKENDS AND HOLIDAYS, CONSTRUCTION, ALTERATION OR REPAIR ACTIVITIES SHALL BE ALLOWED. NO INDIVIDUAL PIECE OF EQUIPMENT SHALL PRODUCE A NOISE LEVEL EXCEEDING EIGHTY-FIVE (85) DBA AT TWENTY-FIVE (25) FEET FROM THE SOURCE. IF THE DEVICE IS LOCATED WITHIN A STRUCTURE ON THE PROPERTY, THE MEASUREMENT SHALL BE MADE AT DISTANCES AS CLOSE TO TWENTY-FIVE (25) FEET FROM THE DEVICE AS POSSIBLE. THE NOISE LEVEL AT ANY POINT OUTSIDE OF THE PROPERTY PLANE SHALL NOT EXCEED EIGHTY-FIVE (85) DBA.
13. PRIOR TO THE ISSUANCE OF ANY GRADING OR BUILDING PERMITS, THE OWNER OR APPLICANT'S DESIGN CONSULTANT SHALL SUBMIT A CONSTRUCTION MANAGEMENT PLAN SHEET (FULL-SIZE) WITHIN THE PLAN SET THAT SHALL INCORPORATE AT A MINIMUM THE PROJECT SCHEDULE, EMPLOYEE PARKING, CONSTRUCTION STAGING AREA, MATERIALS STORAGE AREA(S), CONCRETE WASHOUT(S) AND PROPOSED OUTHOUSE LOCATION(S). PLEASE REFER TO THE TOWN'S CONSTRUCTION MANAGEMENT PLAN GUIDELINES DOCUMENT FOR ADDITIONAL INFORMATION.
14. THE COMMON PRIVATE DRIVEWAY ACCESSING THE PROJECT SITE SHALL BE KEPT OPEN AND IN A SAFE, DRIVE-ABLE CONDITION THROUGHOUT CONSTRUCTION AND IN PERPETUITY AFTER CONSTRUCTION HAS BEEN COMPLETED. IF TEMPORARY CLOSURE IS NEEDED, THEN FORMAL WRITTEN NOTICE SHALL BE PROVIDED AT LEAST ONE (1) WEEK IN ADVANCE OF CLOSURE.
15. THE OWNER OR APPLICANT IS RESPONSIBLE FOR ENSURING THAT ALL CONTRACTORS ARE AWARE OF ALL STORM WATER QUALITY MEASURES AND THAT SUCH MEASURES ARE IMPLEMENTED. BEST MANAGEMENT PRACTICES (BMPS) SHALL BE MAINTAINED AND BE PLACED FOR ALL AREAS THAT HAVE BEEN GRADED OR DISTURBED AND FOR ALL MATERIAL, EQUIPMENT AND/OR OPERATIONS THAT NEED PROTECTION. REMOVAL OF BMPS (TEMPORARY REMOVAL DURING CONSTRUCTION ACTIVITIES) SHALL BE REPLACED AT THE END OF EACH WORKING DAY. FAILURE TO COMPLY WITH THE CONSTRUCTION BMP WILL RESULT IN THE ISSUANCE OF CORRECTION NOTICES, CITATIONS, OR STOP WORK ORDERS.
16. ALL PROJECTS SHALL INCORPORATE AT LEAST ONE OF THE FOLLOWING MEASURES:
   - A. PROTECT SENSITIVE AREAS AND MINIMIZE CHANGES TO THE NATURAL TOPOGRAPHY.
   - B. MINIMIZE IMPERVIOUS SURFACE AREAS.
   - C. DIRECT ROOF DOWNSPOUTS TO VEGETATED AREAS.
   - D. USE POROUS OR PERVIOUS PAVEMENT SURFACES ON THE DRIVEWAY, AT A MINIMUM.
   - E. USE LANDSCAPING TO TREAT STORMWATER.
17. BLOWING DUST SHALL BE REDUCED BY TIMING CONSTRUCTION ACTIVITIES SO THAT PAVING AND BUILDING CONSTRUCTION BEGIN AS SOON AS POSSIBLE AFTER COMPLETION OF GRADING, AND BY LANDSCAPING DISTURBED SOILS AS SOON AS POSSIBLE. FURTHER, WATER TRUCKS SHALL BE PRESENT AND IN USE AT THE CONSTRUCTION SITE. ALL PORTIONS OF THE SITE SUBJECT TO BLOWING DUST SHALL BE WATERED AS OFTEN AS DEEMED NECESSARY BY THE TOWN, OR A MINIMUM OF THREE (3) TIMES DAILY, OR APPLY (NON-TOXIC) SOIL STABILIZERS ON ALL UNPAVED ACCESS ROADS, PARKING AREAS, AND STAGING AREAS AT CONSTRUCTION SITES IN ORDER TO INSURE PROPER CONTROL OF BLOWING DUST FOR THE DURATION OF THE PROJECT. WATERING ON PUBLIC STREETS SHALL NOT OCCUR. STREETS SHALL BE CLEANED BY STREET SWEEPERS OR BY HAND AS OFTEN AS DEEMED NECESSARY BY THE TOWN ENGINEER, OR AT LEAST ONCE A DAY. WATERING ASSOCIATED WITH ON-SITE CONSTRUCTION ACTIVITY SHALL TAKE PLACE BETWEEN THE HOURS OF 8 A.M. AND 5 P.M. AND SHALL INCLUDE AT LEAST ONE (1) LATE-AFTERNOON WATERING TO MINIMIZE THE EFFECTS OF BLOWING DUST. ALL PUBLIC STREETS SOILED OR LITTERED DUE TO THIS CONSTRUCTION ACTIVITY SHALL BE CLEANED AND SWEPT ON A DAILY BASIS DURING THE WORKWEEK TO THE SATISFACTION OF THE TOWN. DEMOLITION OR EARTHWORK ACTIVITIES SHALL BE HALTED WHEN WIND SPEEDS (INSTANTANEOUS GUSTS) EXCEED TWENTY-FIVE (25) MILES PER HOUR (MPH). ALL TRUCKS HAULING SOIL, SAND, OR OTHER LOOSE DEBRIS SHALL BE COVERED.
18. ALL CONSTRUCTION SHALL CONFORM TO THE LATEST REQUIREMENTS OF THE CASQA STORMWATER BEST MANAGEMENT PRACTICES HANDBOOKS FOR CONSTRUCTION ACTIVITIES AND NEW DEVELOPMENT AND REDEVELOPMENT, THE TOWN'S GRADING AND EROSION CONTROL ORDINANCE, AND OTHER GENERALLY ACCEPTED ENGINEERING PRACTICES FOR EROSION CONTROL AS REQUIRED BY THE TOWN ENGINEER WHEN UNDERTAKING CONSTRUCTION ACTIVITIES.
19. IT IS THE RESPONSIBILITY OF CONTRACTOR AND PROPERTY OWNER TO MAKE SURE THAT ALL DIRT TRACKED INTO THE PUBLIC RIGHT-OF-WAY IS CLEANED UP ON A DAILY BASIS. MUD, SILT, CONCRETE AND OTHER CONSTRUCTION DEBRIS SHALL NOT BE WASHED INTO THE TOWN'S STORM DRAINS.
20. GOOD HOUSEKEEPING PRACTICES SHALL BE OBSERVED AT ALL TIMES DURING THE COURSE OF CONSTRUCTION. ALL CONSTRUCTION SHALL BE DILIGENTLY SUPERVISED BY A PERSON OR PERSONS AUTHORIZED TO DO SO AT ALL TIMES DURING WORKING HOURS. THE OWNER OR APPLICANT'S REPRESENTATIVE IN CHARGE SHALL BE AT THE JOB SITE DURING ALL WORKING HOURS. FAILURE TO MAINTAIN THE PUBLIC RIGHT-OF-WAY ACCORDING TO THIS CONDITION MAY RESULT IN PENALTIES AND/OR THE TOWN PERFORMING THE REQUIRED MAINTENANCE AT THE OWNER OR APPLICANT'S EXPENSE.
21. ALL TRUCKS TRANSPORTING MATERIALS TO AND FROM THE SITE SHALL BE COVERED.
22. NO IMPROVEMENTS SHALL OBSTRUCT OR DIVERT RUNOFF TO THE DETRIMENT OF AN ADJACENT, DOWNSTREAM OR DOWN SLOPE PROPERTY.

RAMSEY CIVIL ENGINEERING NOTES

1. SITE PLAN BASED ON TOPOGRAPHIC SURVEY, PERFORMED BY EDMUNDSON & ASSOCIATES LAND SURVEYING, DATED JULY 9, 2019.
2. ALL GRADING WORK, AND CONSTRUCTION OF IMPROVEMENTS SHALL BE DONE IN ACCORDANCE WITH THE 2019 CBC.
3. NO CHANGES ON THESE PLANS SHALL BE MADE WITHOUT PRIOR APPROVAL OF RAMSEY CIVIL ENGINEERING, INC.
4. EROSION CONTROL PLANS SHALL BE PERMITTED AND FILED WITH THE APPLICABLE AGENCIES PRIOR TO ANY CONSTRUCTION OR GRADING OPERATIONS.
5. ROOF DOWNSPOUTS SHALL DISCHARGE AWAY FROM BUILDING FOUNDATION PER 2019 CBC, AND DIRECTED TO GRADE TO DRAIN.
6. TOTAL NEW/REPLACED IMPERVIOUS SURFACES IS BETWEEN LESS THAN 5,000 SQUARE FEET, THEREFORE, THE PROPOSED PROJECT IS CLASSIFIED AS A "SMALL" PROJECT PER THE TOWN OF LOS GATOS STORM WATER REQUIREMENTS.
7. ALL COMPACTION TO BE DETERMINED USING THE LATEST EDITION OF ASTM D1557.
8. THE TYPES, LOCATIONS, SIZES, AND/OR DEPTHS OF EXISTING UNDERGROUND UTILITIES AS SHOWN ON THE IMPROVEMENT PLANS WERE OBTAINED FROM SOURCES OF VARYING RELIABILITY. THE CONTRACTOR SHALL PERFORM THEIR OWN FIELD INVESTIGATION PRIOR TO CONSTRUCTION TO VERIFY UTILITY LOCATIONS. CONTRACTOR IS CAUTIONED THAT ONLY ACTUAL EXCAVATION WILL REVEAL THE TYPES, EXTENT, SIZES, LOCATIONS, AND DEPTHS OF SUCH UNDERGROUND UTILITIES. THE ENGINEER CAN ASSUME NO RESPONSIBILITY FOR THE COMPLETENESS OR ACCURACY OF THE DELINEATION OF SUCH UNDERGROUND UTILITIES WHICH MAY BE ENCOUNTERED. IF AT ANYTIME THE CONTRACTOR IS UNSURE OF UTILITY LOCATIONS, A CERTIFIED UNDERGROUND UTILITY LOCATOR SHALL BE OBTAINED AT THE COST OF THE CONTRACTOR, FOR ONSITE UTILITIES, OR CONTACT U.S.A (OR 811) FOR OFFSITE UTILITIES.
9. ALL UTILITY STRUCTURES TO REMAIN WITHIN AREAS EFFECTED BY THE CONSTRUCTION WORK ON THIS PROJECT, INCLUDING, BUT NOT LIMITED TO CLEANOUTS, WATER VALVES, AND PULL BOXES SHALL BE ADJUSTED TO GRADE BY THE CONTRACTOR WHETHER SHOWN ON THESE PLANS OR NOT. CONTRACTOR IS RESPONSIBLE FOR COORDINATION WITH ALL PUBLIC OR PRIVATE UTILITY COMPANIES.
10. ALL AREAS TO BE GRADED ACCORDING TO THE GRADES SHOWN ON THESE PLANS. A 1% MINIMUM SLOPE FOR DRAINAGE SHALL BE APPLIED IF NO GRADES ARE SHOWN, SUBJECT TO THE APPROVAL OF THE PROJECT ENGINEER.
11. CONTRACTOR SHALL GRADE EVENLY BETWEEN SPOT ELEVATIONS.
12. CONTRACTOR SHALL VERIFY THE CONTENTS AND THICKNESS OF THE BUILDING SLAB SECTION (I.E. CONCRETE, SAND, ROCK) WITH THE STRUCTURAL PLANS PRIOR TO COMMENCEMENT OF GRADING OPERATIONS.
13. ALL GRADING, TRENCHING, SHORING, PAVING, AND CONSTRUCTION WORK SHALL BE PERFORMED IN ACCORDANCE WITH APPLICABLE O.S.H.A REGULATIONS.
14. CONTRACTOR SHALL ASSUME SOLE AND COMPLETE RESPONSIBILITY FOR JOB SITE CONDITIONS DURING THE COURSE OF THE CONSTRUCTION OF THIS PROJECT, INCLUDING SAFETY OF ALL PERSONNEL AND PROPERTY. THIS REQUIREMENT SHALL APPLY CONTINUOUSLY AND NOT BE LIMITED TO NORMAL WORKING HOURS. CONTRACTOR AGREES TO DEFEND, INDEMNIFY, AND HOLD DESIGN PROFESSIONALS AND CITY REPRESENTATIVES HARMLESS FROM ANY AND ALL LIABILITY, REAL OR ALLEGED, IN CONNECTION WITH THE PERFORMANCE OF WORK ON THIS PROJECT, EXCEPTING LIABILITY ARISING FROM THE SOLE NEGLIGENCE OF THE DESIGN PROFESSIONAL.
15. THE OWNER ACKNOWLEDGES THAT THE PARCEL DOES AND WILL CONTINUE TO RECEIVE UPSTREAM RUNOFF, AND THAT THEY ARE RESPONSIBLE FOR MAINTENANCE OF THE DRAINAGE PATHWAY (NATURAL AND/OR MAN-MADE) THROUGH THE PARCEL, AND THAT THE COUNTY & FLOOD CONTROL DISTRICT(S) ARE NOT RESPONSIBLE FOR THE UPSTREAM RUNOFF OR FOR THE MAINTENANCE OF THE DRAINAGE PATHWAY.
16. A DOWNSTREAM ANALYSIS FOR STORMWATER RUNOFF WAS PERFORMED. THERE WILL BE NO SIGNIFICANT IMPACT TO DOWNSTREAM PROPERTIES DUE TO THE PROPOSED IMPROVEMENTS, SHOWN ON THESE PLANS. ONSITE STORMWATER WILL BE CONTROLLED VIA THE PROPOSED PERVIOUS PAVERS SYSTEM, WITH A SAFE OVERFLOW TO THE EXISTING DRIVEWAY VIA SHEET FLOW. RUNOFF WILL THEN DISCHARGE TO LINDA CT. (12%+/-) LONGITUDINAL SLOPE AND ULTIMATELY TO BOWEN AVE. AND THE EXISTING STORM DRAIN SYSTEM.

Vicinity Map

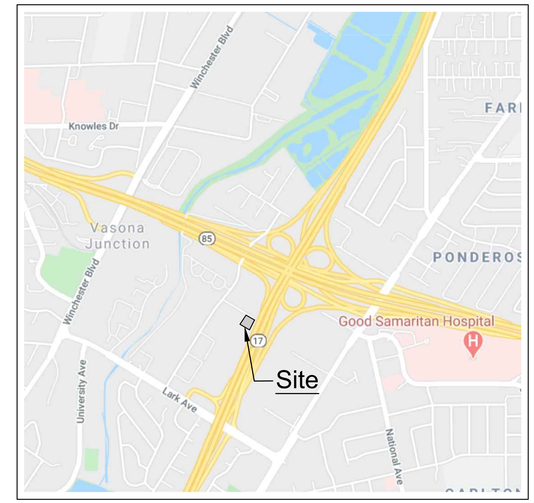

Index of Sheets

SHEET NO.	DESCRIPTION
C1	COVER SHEET
C2	SITE PLAN
C3	GRADING & DRAINAGE PLAN
C4	EROSION & SEDIMENT CONTROL PLAN
C5	CLEAN BAY BLUE PRINT
C6	CONSTRUCTION MANAGEMENT PLAN
F1	FOUNDATION PLAN

PROJECT INFO

OWNER:	EDWARD MORIMOTO
PROJECT ADDRESS:	14790 OKA ROAD LOS GATOS, CA 95032
PROJECT SCOPE:	CONSTRUCTION OF A 2,160 SF PREFABRICATED STEEL BUILDING WITH EARTHEN ACCESS AND ASSOCIATED GRADING, INCLUDING DRAINAGE SWALES.
CONSTRUCTION TYPE:	GROUP U

RAMSEY CIVIL ENGINEERING INC
CIVIL ENGINEERING
LAND PLANNING
PROJECT MANAGEMENT
CONSTRUCTION SUPPORT
QSD AND QSP SERVICES
2905 KRISTIE COURT
SANTA CRUZ, CA 95065
TEL (831) 462-2905
www.ramseycivilengineering.com

REGISTERED PROFESSIONAL ENGINEER DAVID RAMSEY NO. C73735 CIVIL STATE OF CALIFORNIA

DAVID RAMSEY DATE
RCE# 73735

APN# 424-08-059

PLAN TYPE

COVER SHEET
YUKI FARMS
14790 OKA ROAD, LOS GATOS, CA

NUMBER	BY	DESCRIPTION	DATE
REVISION BLOCK			

811 Know what's below. Call before you dig.

DRAWN BY:	DMR
DESIGNED BY:	DMR
DATE:	8/28/2020
SCALE:	AS NOTED
PROJECT NO:	20-004
SHEET:	C1

SURVEY NOTES

SURVEY FOR THIS PROJECT PROVIDED BY EDMUNSON & ASSOCIATES LAND SURVEYING, DATED JULY 9, 2019.

BENCHMARK INFORMATION IS TAKEN FROM AFOREMENTIONED SURVEY.

PROPERTY LINES ARE SHOWN FOR ORIENTATION ONLY AND ARE BASED ON RECORD DATA. THEY MAY BE DISCOVERED TO BE DIFFERENT, SUBJECT TO THE RESULTS OF A COMPLETE BOUNDARY SURVEY.

BENCHMARK

PROJECT BENCHMARK IS A SET COM. IN THE ASPHALT ROAD.

ELEVATION = 277.6' (NAVD88 DATUM)

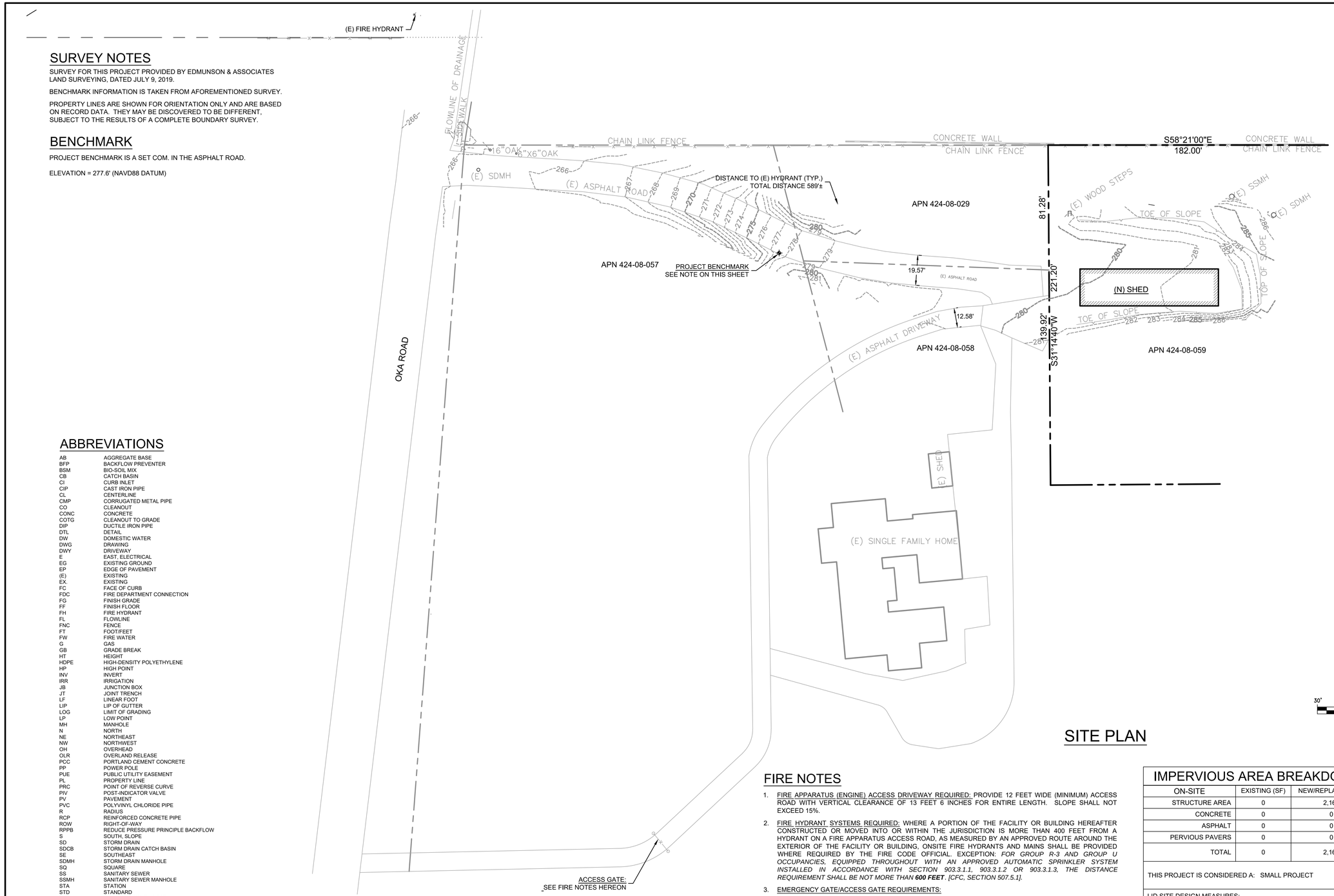

SITE PLAN

30' 0 15' 30' 60'

GRAPHIC SCALE: 1 INCH = 30 FEET

ABBREVIATIONS

AB	AGGREGATE BASE
BFP	BACKFLOW PREVENTER
BSM	BIO-SOIL MIX
CB	CATCH BASIN
CI	CURB INLET
CIP	CAST IRON PIPE
CL	CENTERLINE
CMP	CORRUGATED METAL PIPE
CO	CLEANOUT
CONC	CONCRETE
COTG	CLEANOUT TO GRADE
DIP	DUCTILE IRON PIPE
DTL	DETAIL
DW	DOMESTIC WATER
DWG	DRAWING
DWY	DRIVEWAY
E	EAST, ELECTRICAL
EG	EXISTING GROUND
EP	EDGE OF PAVEMENT
(E)	EXISTING
EX.	EXISTING
FC	FACE OF CURB
FDC	FIRE DEPARTMENT CONNECTION
FG	FINISH GRADE
FF	FINISH FLOOR
FH	FIRE HYDRANT
FL	FLOWLINE
FNC	FENCE
FT	FOOT/FEET
FW	FIRE WATER
G	GAS
GB	GRADE BREAK
HT	HEIGHT
HDPE	HIGH-DENSITY POLYETHYLENE
HP	HIGH POINT
INV	INVERT
IRR	IRRIGATION
JB	JUNCTION BOX
JT	JOINT TRENCH
LF	LINEAR FOOT
LIP	LIP OF GUTTER
LOG	LIMIT OF GRADING
LP	LOW POINT
MH	MANHOLE
N	NORTH
NE	NORTHEAST
NW	NORTHWEST
OH	OVERHEAD
OLR	OVERLAND RELEASE
PCC	PORTLAND CEMENT CONCRETE
PP	POWER POLE
PUE	PUBLIC UTILITY EASEMENT
PL	PROPERTY LINE
PRC	POINT OF REVERSE CURVE
PIV	POST-INDICATOR VALVE
PV	PAVEMENT
PVC	POLYVINYL CHLORIDE PIPE
R	RADIUS
RCP	REINFORCED CONCRETE PIPE
ROW	RIGHT-OF-WAY
RPPB	REDUCE PRESSURE PRINCIPLE BACKFLOW
S	SOUTH, SLOPE
SD	STORM DRAIN
SDCB	STORM DRAIN CATCH BASIN
SE	SOUTHEAST
SDMH	STORM DRAIN MANHOLE
SQ	SQUARE
SS	SANITARY SEWER
SSMH	SANITARY SEWER MANHOLE
STA	STATION
STD	STANDARD
SW	SIDEWALK, SOUTHWEST
TC	TOP OF CURB
TG	TOP OF GRATE
TRAN	TRANSFORMER
TYP	TYPICAL
USA	UNDERGROUND SERVICE ALERT
W	WEST, WATER
WM	WATER METER
WV	WATER WALVE

FIRE NOTES

1. FIRE APPARATUS (ENGINE) ACCESS DRIVEWAY REQUIRED: PROVIDE 12 FEET WIDE (MINIMUM) ACCESS ROAD WITH VERTICAL CLEARANCE OF 13 FEET 6 INCHES FOR ENTIRE LENGTH. SLOPE SHALL NOT EXCEED 15%.

2. FIRE HYDRANT SYSTEMS REQUIRED: WHERE A PORTION OF THE FACILITY OR BUILDING HEREAFTER CONSTRUCTED OR MOVED INTO OR WITHIN THE JURISDICTION IS MORE THAN 400 FEET FROM A HYDRANT ON A FIRE APPARATUS ACCESS ROAD, AS MEASURED BY AN APPROVED ROUTE AROUND THE EXTERIOR OF THE FACILITY OR BUILDING, ONSITE FIRE HYDRANTS AND MAINS SHALL BE PROVIDED WHERE REQUIRED BY THE FIRE CODE OFFICIAL. EXCEPTION: *FOR GROUP R-3 AND GROUP U OCCUPANCIES, EQUIPPED THROUGHOUT WITH AN APPROVED AUTOMATIC SPRINKLER SYSTEM INSTALLED IN ACCORDANCE WITH SECTION 903.3.1.1, 903.3.1.2 OR 903.3.1.3, THE DISTANCE REQUIREMENT SHALL BE NOT MORE THAN* ***600 FEET****. [CFC, SECTION 507.5.1].*

3. EMERGENCY GATE/ACCESS GATE REQUIREMENTS:

3.1. GATE INSTALLATIONS SHALL CONFORM WITH FIRE DEPARTMENT STANDARDS DETAILS AND SPECIFICATIONS G-1 AND, WHEN OPEN SHALL NOT OBSTRUCT ANY PORTION OF THE REQUIRED WIDTH OF 12' FOR EMERGENCY ACCESS ROADWAYS.

3.2. GATE LOCKS SHALL BE APPROVED BY THE FIRE DEPARTMENT PRIOR TO INSTALLATION.

3.3. GATES ACROSS THE EMERGENCY ACCESS ROADWAYS SHALL BE EQUIPPED WITH AN APPROVED ACCESS DEVICES. IF THE GATES ARE OPERATED ELECTRICALLY, AN APPROVED KNOX KEY SWITCH SHALL BE INSTALLED; IF THEY ARE OPERATED MANUALLY, THEN AN APPROVED KNOX PADLOCK SHALL BE INSTALLED. GATES PROVIDING ACCESS FROM A ROAD TO A DRIVEWAY OR OTHER ROADWAY SHALL BE AT LEAST 30 FEET FROM THE ROAD BEING EXITED. CFC SEC. 503.6 AND 506.

4. CONSTRUCTION SITE FIRE SAFETY: ALL CONSTRUCTION SITES MUST COMPLY WITH APPLICABLE PROVISIONS OF THE CFC CHAPTER 33 AND OUR STANDARD DETAIL AND SPECIFICATION SL-7. PROVIDE APPROPRIATE NOTATIONS ON SUBSEQUENT PLAN SUBMITTALS, AS APPROPRIATE TO THE PROJECT. CFC CHP. 33.

IMPERVIOUS AREA BREAKDOWN

ON-SITE	EXISTING (SF)	NEW/REPLACED (SF)
STRUCTURE AREA	0	2,160
CONCRETE	0	0
ASPHALT	0	0
PERVIOUS PAVERS	0	0
TOTAL	0	2,160

THIS PROJECT IS CONSIDERED A: SMALL PROJECT

LID SITE DESIGN MEASURES:

1. DIRECT ROOF RUNOFF ONTO VEGETATED AREAS.

Know what's below. Call before you dig.

RAMSEY CIVIL ENGINEERING INC

CIVIL ENGINEERING
LAND PLANNING
PROJECT MANAGEMENT
CONSTRUCTION SUPPORT
QSD AND QSP SERVICES

2905 KRISTIE COURT
SANTA CRUZ, CA 95065
TEL (831) 462-2905
www.ramseycivilengineering.com

REGISTERED PROFESSIONAL ENGINEER DAVID RAMSEY NO. C73735 CIVIL STATE OF CALIFORNIA

DAVID RAMSEY DATE
RCE# 73735

APN# 424-08-059

PLAN TYPE

SITE PLAN

YUKI FARMS

14790 OKA ROAD, LOS GATOS, CA

NUMBER	BY	DESCRIPTION	DATE

REVISION BLOCK

DRAWN BY:	DMR
DESIGNED BY:	DMR
DATE:	8/28/2020
SCALE:	AS NOTED
PROJECT NO:	20-004
SHEET:	C2

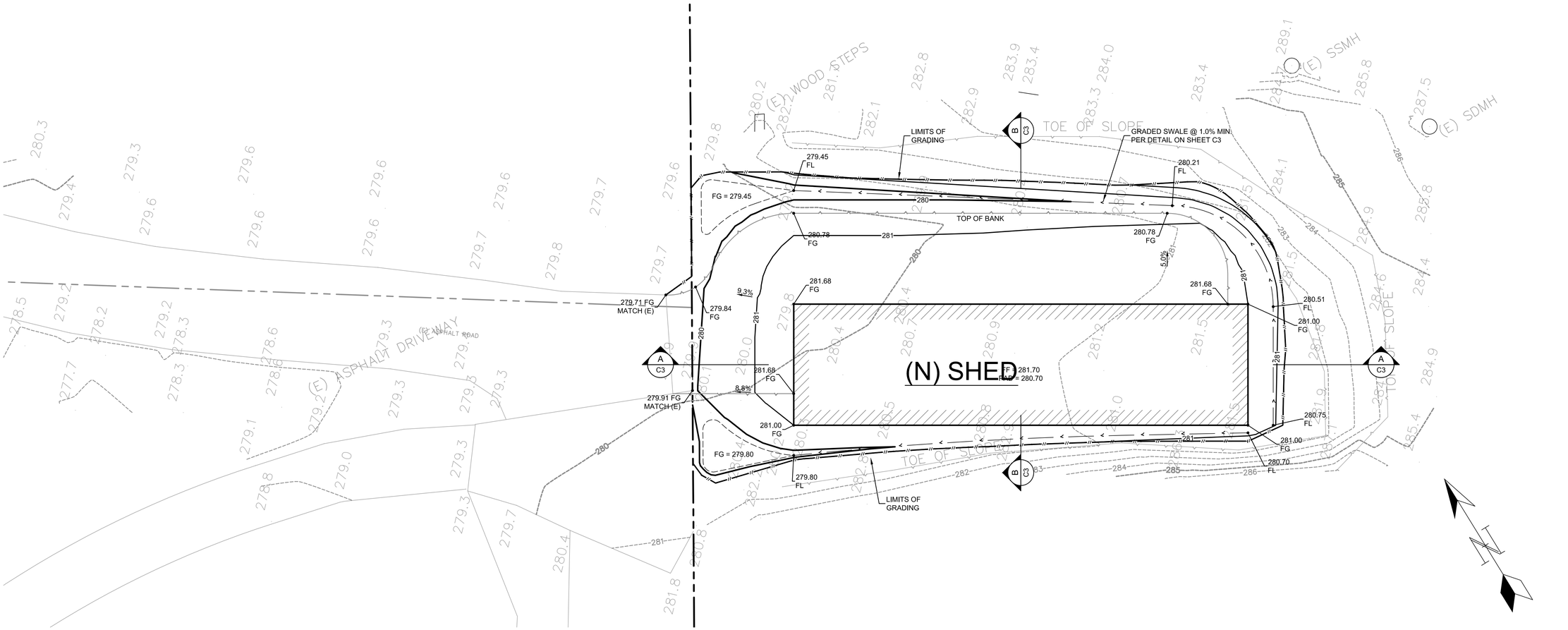

GRADING & DRAINAGE PLAN

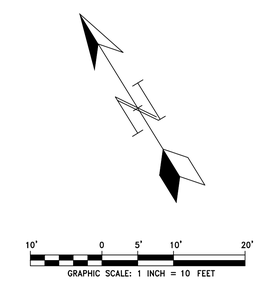

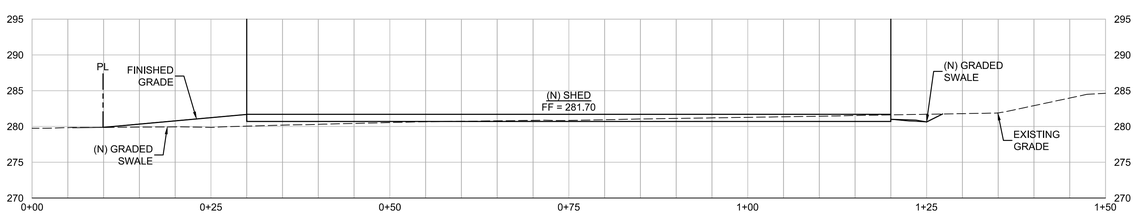

SECTION A

SCALE: 1"= 10' (H)
1" = 10' (V)

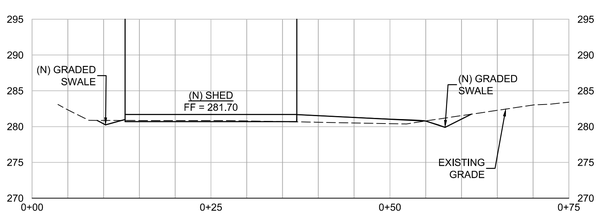

SECTION B

SCALE: 1"= 10' (H)
1" = 10' (V)

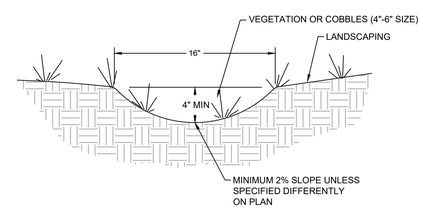

GRADED SWALE

NTS

ESTIMATED EARTHWORK QUANTITIES

47	CUBIC YARDS EXCAVATION
92	CUBIC YARDS EMBANKMENT
45	CUBIC YARDS (IMPORT)

NOTES

1. ESTIMATE DOES NOT INCLUDE BUILDING OR RETAINING WALL FOUNDATIONS, UTILITY TRENCH VOLUMES OR ANY OVEREXCAVATION, IF REQUIRED BY SITE CONDITIONS.
2. ESTIMATE ASSUMES A 0% COMPACTION FACTOR ON ALL FILL MATERIAL AND A 0% EXPANSION FACTOR ON ALL CUT MATERIAL.
3. PRIOR TO COMMENCEMENT OF WORK CONTRACTOR SHALL CONFIRM THAT ESTIMATES ARE CORRECT.

RAMSEY CIVIL ENGINEERING INC
CIVIL ENGINEERING
LAND PLANNING
PROJECT MANAGEMENT
CONSTRUCTION SUPPORT
QSD AND QSP SERVICES
2905 KRISTIE COURT
SANTA CRUZ, CA 95065
TEL (831) 462-2905
www.ramseycivilengineering.com

REGISTERED PROFESSIONAL ENGINEER DAVID RAMSEY NO. C73735 CIVIL STATE OF CALIFORNIA

DAVID RAMSEY DATE
RCE# 73735

APN# 424-08-059

PLAN TYPE

GRADING & DRAINAGE PLAN

YUKI FARMS

14790 OKA ROAD, LOS GATOS, CA

NUMBER	BY	DESCRIPTION	DATE
REVISION BLOCK			

Know what's below. Call before you dig.

DRAWN BY:	DMR
DESIGNED BY:	DMR
DATE:	8/28/2020
SCALE:	AS NOTED
PROJECT NO:	20-004
SHEET:	C3

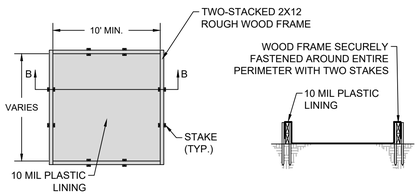

OPTION #1
ABOVE GRADE
(WOOD PLANKS)

SECTION B - B

NOTE:
ACTUAL LAYOUT DETERMINED IN THE FIELD. ALTERNATIVE WASHOUTS AVAILABLE, CONFIRM WITH ENGINEER PRIOR TO INSTALLATION

INSPECTION AND MAINTENANCE

1. THE CONTRACTORS WATER POLLUTION CONTROL (WPCM) MANAGER SHALL MONITOR ON SITE CONCRETE WASTE STORAGE AND DISPOSAL PROCEDURES AT LEAST WEEKLY.
2. THE WPCM SHALL MONITOR CONCRETE WORKING TASKS, SUCH AS SAW CUTTING, CORING, GRINDING AND GROOVING DAILY TO ENSURE PROPER METHODS ARE EMPLOYED AS DIRECTED BY THE ENGINEER.
3. TEMPORARY CONCRETE WASHOUT FACILITIES SHALL BE MAINTAINED TO PROVIDE ADEQUATE HOLDING CAPACITY WITH A MINIMUM FREEBOARD OF 4 INCHES FOR ABOVE GRADE FACILITIES AND 12 INCHES FOR BELOW GRADE FACILITIES. MAINTAINING TEMPORARY CONCRETE WASHOUT FACILITIES SHALL INCLUDE REMOVING AND DISPOSING OF HARDENED CONCRETE AND RETURNING THE FACILITIES TO A FUNCTIONAL CONDITION. HARDENED CONCRETE SHALL BE REMOVED AND DISPOSED OF BY THE CONTRACTOR.
4. EXISTING FACILITIES MUST BE CLEANED, OR NEW FACILITIES MUST BE CONSTRUCTED AND READY FOR USE ONCE THE WASHOUT IS 75% FULL.
5. TEMPORARY CONCRETE WASHOUT FACILITIES SHALL BE INSPECTED FOR DAMAGE (I.E. TEARS IN POLYETHYLENE LINER, MISSING SANDBAGS, ETC.). DAMAGED FACILITIES SHALL BE REPAIRED.

CONCRETE WASHOUT

NTS

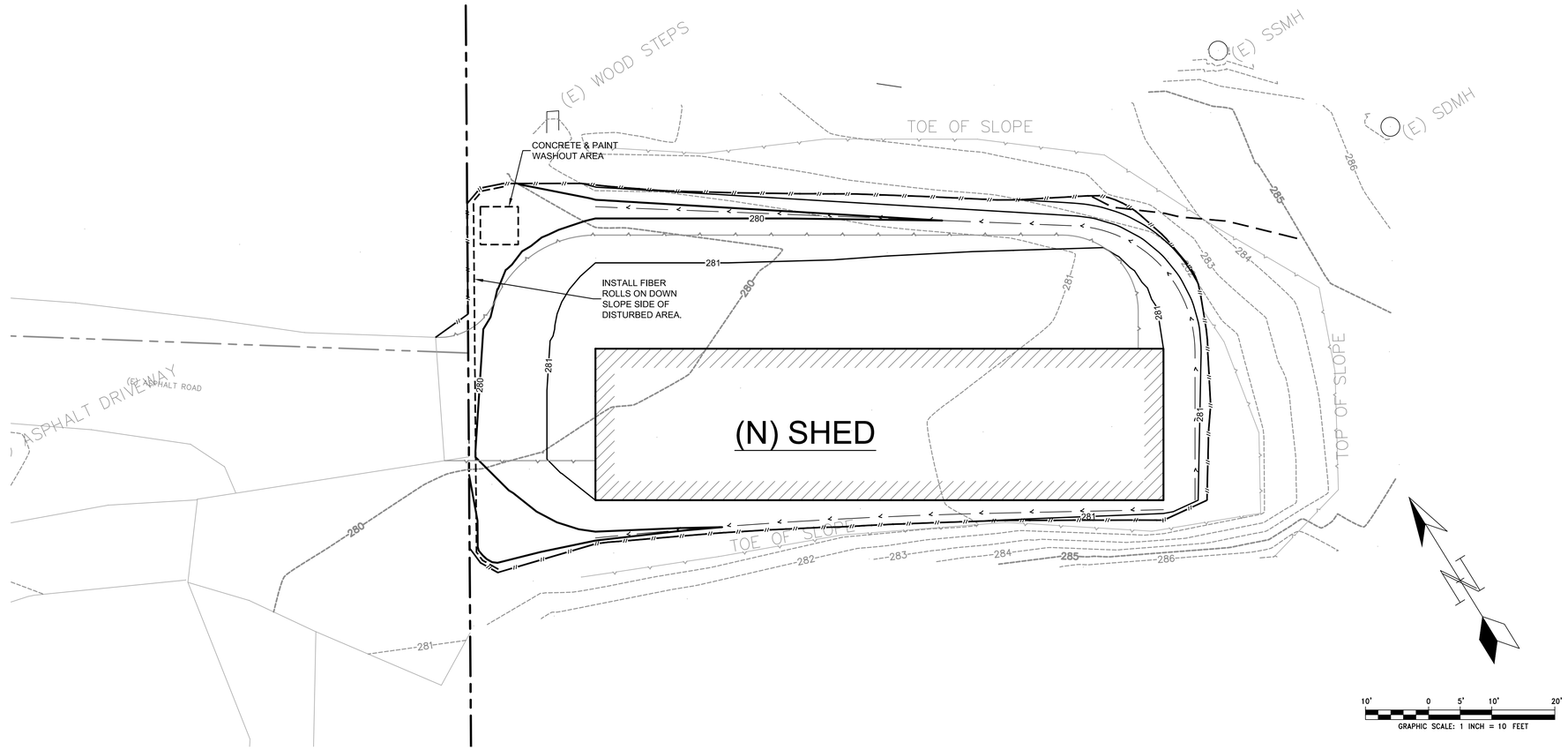

EROSION & SEDIMENT CONTROL PLAN

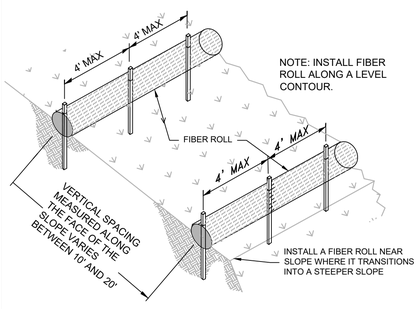

TYPICAL INSTALLATION

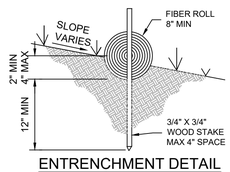

ENTRENCHMENT DETAIL

FIBER ROLLS PART 1

NTS

CONSTRUCTION SPECIFICATIONS

1. PREPARE SLOPE BEFORE THE FIBER ROLL PROCEDURE IS STARTED. SHALLOW GULLIES SHOULD BE SMOOTHED AS WORK PROGRESSES.
2. DIG SMALL TRENCHES ACROSS SLOPE ON CONTOUR, TO PLACE FIBER ROLLS IN. THE TRENCH SHOULD BE DEEP ENOUGH TO ACCOMMODATE HALF THE THICKNESS OF THE FIBER ROLL. WHEN THE SOIL IS LOOSE AND UNCOMPACTED, THE TRENCH SHOULD BE DEEP ENOUGH TO BURY THE FIBER ROLL 2/3 OF ITS THICKNESS BECAUSE THE GROUND WILL SETTLE. IT IS CRITICAL THAT FIBER ROLLS ARE INSTALLED PERPENDICULAR TO WATER MOVEMENT, PARALLEL TO THE SLOPE CONTOUR.
3. START BUILDING TRENCHES AND INSTALL FIBER ROLLS FROM THE BOTTOM OF THE SLOPE AND WORK UP.
4. CONSTRUCT TRENCHES AT CONTOUR INTERVALS OF THREE TO EIGHT FEET APART DEPENDING ON STEEPNESS OF SLOPE. THE STEEPER THE SLOPE, THE CLOSER TOGETHER THE TRENCHES.
5. LAY THE FIBER ROLL ALONG THE TRENCHES FITTING IT SNUGLY AGAINST THE SOIL. MAKE SURE NO GAPS EXIST BETWEEN THE SOIL AND THE FIBER ROLL. USE A STRAIGHT BAR TO DRIVE HOLES THROUGH THE FIBER ROLL AND INTO THE SOIL FOR THE WOODEN STAKES.
6. DRIVE THE STAKE THROUGH THE PREPARED HOLE INTO THE SOIL. LEAVE ONLY ONE OR TWO INCHES OF STAKE EXPOSED ABOVE FIBER ROLL. IF USING WILLOW STAKES REFER TO USDA SOIL CONSERVATION SERVICE TECHNICAL GUIDE, BIOENGINEERING, FOR GUIDELINES TO PREPARING LIVE WILLOW MATERIAL.
7. INSTALL STAKES AT LEAST EVERY FOUR FEET APART THROUGH FIBER ROLL. ADDITIONAL STAKES MAY BE DRIVEN ON THE DOWNSLOPE SIDE OF THE TRENCHES ON HIGHLY EROSIVE OR VERY STEEP SLOPES.

INSTALLATION AND MAINTENANCE

8. INSPECT THE FIBER ROLL AND THE SLOPES AFTER SIGNIFICANT STORMS. MAKE SURE THE FIBER ROLLS ARE IN CONTACT WITH THE SOIL.
9. REPAIR ANY RILLS OR GULLIES PROMPTLY.
10. RESEED OR REPLANT VEGETATION IF NECESSARY UNTIL THE SLOPE IS STABILIZED.

FIBER ROLLS PART 2

NTS

EROSION CONTROL NOTES

1. THE EROSION CONTROL PLANS IN THIS SET SHALL BE REVIEWED AND IMPLEMENTED BY THE CONTRACTOR PRIOR TO COMMENCEMENT OF WORK.
2. THE CONTRACTOR SHALL ENSURE ALL MONITORING AND INSPECTIONS ARE PERFORMED AS REQUIRED ONSITE THROUGHOUT CONSTRUCTION.
3. NO LAND CLEARING, GRADING OR EXCAVATION SHALL BE DONE BETWEEN OCTOBER 15TH AND APRIL 15TH. ANY DEVIATION FROM THIS CONDITION REQUIRES REVIEW AND APPROVAL OF A SEPARATE WINTER EROSION CONTROL PLAN BY ENVIRONMENTAL PLANNING PRIOR TO BEGINNING CONSTRUCTION. THE DEVELOPER SHALL BE RESPONSIBLE FOR IMPLEMENTING AND MAINTAINING SITE EROSION CONTROL AT ALL TIMES.
4. IT SHALL BE THE RESPONSIBILITY OF THE OWNER AND THE PERMITTEE TO ENSURE THAT EROSION DOES NOT OCCUR FROM ANY ACTIVITY DURING OR AFTER PROJECT CONSTRUCTION. ADDITIONAL MEASURES, BEYOND THOSE SPECIFIED, MAY BE REQUIRED BY THE PLANNING DIRECTOR AS DEEMED NECESSARY TO CONTROL ACCELERATED EROSION.
5. PRIOR TO ANY FORECAST RAIN AND ANYTIME BETWEEN OCTOBER 15 AND APRIL 15, AT THE END OF EACH WORKDAY, AT THE END OF EACH WORKWEEK, THE DEVELOPER SHALL IMPLEMENT ALL TEMPORARY MEASURES NECESSARY TO PREVENT EROSION AND SILTATION, UNTIL THE PROJECT HAS BEEN FINALIZED. THESE MEASURES SHALL INCLUDE, BUT NOT BE LIMITED TO, DIRECT SEEDING OF THE AFFECTED AREAS, STRAW MULCHING, AND/OR INSTALLATION OF STRAW BALES DAMS/SILT FENCES.
6. DURING CONSTRUCTION, NO TURBID WATER SHALL BE PERMITTED TO LEAVE THE SITE. USE OF SILT AND GREASE TRAPS, FILTER BERMS, HAY BALES OR SILT FENCES SHALL BE USED TO PREVENT SUCH DISCHARGE.
7. ALL AREAS ON- AND OFF-SITE EXPOSED DURING CONSTRUCTION ACTIVITIES, IF NOT PERMANENTLY LANDSCAPED PER PLAN, SHALL BE PROTECTED BY MULCHING AND/OR SEEDING WITH ANNUAL WINTER BARLEY.
8. ALL EXCAVATED MATERIAL SHALL BE REMOVED TO AN APPROVED DISPOSAL SITE OR DISPOSED OF ON-SITE IN A MANNER THAT WILL NOT CAUSE EROSION.
9. ANY MATERIAL STOCKPILED, FOR LONGER THAN 14 DAYS, DURING CONSTRUCTION SHALL BE COVERED WITH PLASTIC.
10. UPON COMPLETION OF CONSTRUCTION, ALL REMAINING EXPOSED SOILS SHALL BE PERMANENTLY REVEGETATED PER LANDSCAPING PLAN. THE PROTECTION SHALL BE INSTALLED PRIOR TO CALLING FOR FINAL APPROVAL OF THE PROJECT AND AT ALL TIMES BETWEEN OCTOBER 15 AND APRIL 15. SUCH PROTECTION SHALL BE MAINTAINED FOR AT LEAST ONE WINTER UNTIL PERMANENT PROTECTION IS ESTABLISHED.
11. EXPOSED SOIL ON SLOPES GREATER THAN 20% SHALL BE SEEDED, COVERED WITH 2 INCHES OF STRAW, AND AN EROSION CONTROL BLANKET. THE EROSION CONTROL BLANKET SHALL BE STAKED IN PLACE.
12. IT IS THE DEVELOPER'S RESPONSIBILITY TO SEE THAT ADDITIONAL MEASURES, NECESSARY TO CONTROL SITE EROSION AND PREVENT SEDIMENT TRANSPORT OFF-SITE ARE IMPLEMENTED.
13. ALL SPILLS AND/OR LEAKS SHALL BE IMMEDIATELY CLEANED UP AND MITIGATED PER THE CONTRACTORS O&M STANDARDS.

STORMWATER O&M PLAN

1. REFER TO THE RECORDED STORMWATER MAINTENANCE AGREEMENT (SCC FIG. SWM-25A) FOR ADDITIONAL SITE/PROJECT INFORMATION AND REQUIREMENTS, AS WELL AS RESPONSIBLE PARTY AGREEMENT.
2. STORMWATER MAINTENANCE AGREEMENT SHALL TRANSFER WITH OWNERSHIP
3. BELOW MAINTENANCE SPECIFICATIONS REFER TO POST-CONSTRUCTION REQUIREMENTS, REFER TO THE PROJECT EROSION CONTROL PLAN (SHEET C4) FOR MAINTENANCE REQUIREMENTS DURING THE CONSTRUCTION PHASE OF THE PROJECT.
4. MAINTENANCE AGREEMENT REFERS TO ALL PRIVATELY OWNED STORMWATER FACILITIES.
5. SUMMARIZED MAINTENANCE REQUIREMENTS FOR DRAINAGE FACILITIES:
   - 5.1. ROOF DOWNSPOUTS:
     - 5.1.1. ALL DOWNSPOUTS AND ROOF GUTTERS SHALL BE INSPECTED YEARLY FOR SEDIMENT AND/OR TRASH BUILD-UP. ALL SEDIMENT AND TRASH SHALL BE REMOVED AND PROPERLY DISPOSED OF.
   - 5.2. GRADED SWALES:
     - 5.2.1. ROUTINE MAINTENANCE ON AN ANNUAL BASIS SHALL INCLUDE TRASH AND DEBRIS REMOVAL, AND REMOVAL OF LEAVES DURING AND AFTER FALL LEAF DROP.
     - 5.2.2. RECOMMENDED INSPECTIONS ON AN ANNUAL BASIS INCLUDE:
       - 5.2.2.1. ENSURE INFLOW AND OUTFLOW AREAS ARE SECURE AND NO EROSION HAS OCCURRED. ADD ROCK DISSIPATION PADS OR CHECK DAMS AS NECESSARY TO REDUCE FLOWS AND ELIMINATE EROSION.
       - 5.2.2.2. IF VISIBLE SEDIMENT EXIST AT BOTTOM OF FACILITY, SEDIMENT SHALL BE REMOVED TO ENSURE PROPER FLOW THROUGH.
       - 5.2.2.3. IF EXCESSIVE PONDING OF WATER IS OCCURRING (2-3 DAYS AFTER THE END OF A STORM) CONFIRM LEAF, DEBRIS OR SEDIMENT BUILD-UP IS NOT IMPEDING FLOW, REMOVE AS NECESSARY.
       - 5.2.2.4. IF VEGETATED ENSURE ALL VEGETATION IS HEALTHY. REMOVE AND REPLACE ALL DEAD OR DYING VEGETATION.

SOURCE CONTROL MEASURES

BELOW ARE THE MEANS AND METHODS TO CONTROLLING POLLUTING ACTIVITIES:

- INDOOR & STRUCTURAL PEST CONTROL - ALL PEST CONTROL MEASURES SHALL BE PERFORMED TO PREVENT ANY DISCHARGES INTO THE STORM DRAIN SYSTEM.
- LANDSCAPE/OUTDOOR PESTICIDE USE - PESTICIDES SHALL BE USED ONLY IF NECESSARY AND SHALL BE LIMITED TO REQUIRED TREATMENT AREA. SPOT TREATMENT WITH HANDHELD SPRAYER SHALL BE USED IN LOW QUANTITIES.
- OUTDOOR STORAGE OF EQUIPMENT OR MATERIALS - ALL MATERIALS, CONSTRUCTION OR OTHER, SHALL BE STORED INDOORS OR WITHIN A COVERED (PROTECTED) AREA.
- UNAUTHORIZED NON-STORMWATER DISCHARGES - ALL UNAUTHORIZED NON-STORMWATER DISCHARGES, DURING AND AFTER CONSTRUCTION, SHALL BE REPORTED TO THE TOWN OF LOS GATOS.
- BUILDING & GROUND MAINTENANCE - ANY ROUTINE MAINTENANCE PERFORMED SHALL BE COMPLETED TO REDUCE OR ELIMINATE ANY NON-STORMWATER DISCHARGES FROM THE SITE.

811 Know what's below. Call before you dig.

RAMSEY CIVIL ENGINEERING INC
CIVIL ENGINEERING
LAND PLANNING
PROJECT MANAGEMENT
CONSTRUCTION SUPPORT
QSD AND QSP SERIVCES
2905 KRISTIE COURT
SANTA CRUZ, CA 95065
TEL (831) 462-2905
www.ramseycivilengineering.com

REGISTERED PROFESSIONAL ENGINEER DAVID RAMSEY NO. C73735 CIVIL STATE OF CALIFORNIA

DAVID RAMSEY DATE
RCE# 73735

APN# 424-08-059

PLAN TYPE

EROSION & SEDIMENT CONTROL PLAN

YUKI FARMS

14790 OKA ROAD, LOS GATOS, CA

NUMBER	BY	DESCRIPTION	DATE

REVISION BLOCK

DRAWN BY:	DMR
DESIGNED BY:	DMR
DATE:	8/28/2020
SCALE:	AS NOTED
PROJECT NO:	20-004
SHEET:	C4

Clean Bay Blue Print

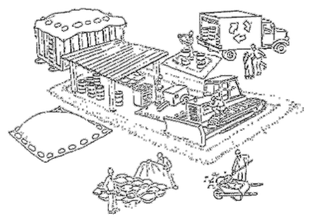

Make sure your crews and subs do the job right!

Runoff from streets and other paved areas is a major source of pollution and damage to creeks and the San Francisco Bay. Construction activities can directly affect the health of creeks and the Bay unless contractors and crews plan ahead to keep dirt, debris, and other construction waste away from storm drains and local creeks. Following these guidelines and the project specifications will ensure your compliance with **City of Fremont** requirements.

Materials storage & spill cleanup

Non-hazardous materials management

- Sand, dirt, and similar materials must be stored at least 10 feet (3 meters) from catch basins. All construction material must be covered with a tarp and contained with a perimeter control during wet weather or when rain is forecasted or when not actively being used within 14 days.
- Use (but don't overuse) reclaimed water for dust control as needed.
- Sweep or vacuum streets and other paved areas daily. Do not wash down streets or work areas with water!
- Recycle all asphalt, concrete, and aggregate base material from demolition activities. Comply with **City of Fremont** Ordinances for recycling construction materials, wood, gyp board, pipe, etc.
- Check dumpsters regularly for leaks and to make sure they are not overfilled. Repair or replace leaking dumpsters promptly.
- Cover all dumpsters with a tarp at the end of every work day or during wet weather.

Hazardous materials management

- Label all hazardous materials and hazardous wastes (such as pesticides, paints, thinners, solvents, fuel, oil, and antifreeze) in accordance with city, county, state, and federal regulations.
- Store hazardous materials and wastes in water tight containers, store in appropriate secondary containment, and cover them at the end of every work day or during wet weather or when rain is forecasted.
- Follow manufacturer's application instructions for hazardous materials and be careful not to use more than necessary. Do not apply chemicals outdoors when rain is forecasted within 24 hours.
- Be sure to arrange for appropriate disposal of all hazardous wastes.

Spill prevention and control

- Keep a stockpile of spill cleanup materials (rags, absorbents, etc.) available at the construction site at all times.
- When spills or leaks occur, contain them immediately and be particularly careful to prevent leaks and spills from reaching the gutter, street, or storm drain. Never wash spilled material into a gutter, street, storm drain, or creek!
- Dispose of all containment and cleanup materials properly.
- Report any hazardous materials spills immediately! Dial 911

Construction Entrances and Perimeter

- Establish and maintain effective perimeter controls and stabilize all construction entrances and exits to sufficiently control erosion and sediment discharges from site and tracking off site.
- Sweep or vacuum any street tracking immediately and secure sediment source to prevent further tracking.

Vehicle and equipment maintenance & cleaning

- Inspect vehicles and equipment for leaks frequently. Use drip pans to catch leaks until repairs are made; repair leaks promptly.
- Fuel and maintain vehicles on site only in a bermed area or over a drip pan that is big enough to prevent runoff.
- If you must clean vehicles or equipment on site, clean with water only in a bermed area that will not allow rinse water to run into gutters, streets, storm drains, or creeks.
- Do not clean vehicles or equipment on-site using soaps, solvents, degreasers, steam cleaning equipment, etc.

Earthwork & contaminated soils

- Keep excavated soil on the site where it will not collect in the street.
- Transfer to dump trucks should take place on the site, not in the street.
- Use fiber rolls, silt fences, or other control measures to minimize the flow of silt off the site.

- Earth moving activities are only allowed during dry weather by permit and as approved by the **City** Inspector in the Field.
- Mature vegetation is the best form of erosion control. Minimize disturbance to existing vegetation whenever possible.
- If you disturb a slope during construction, prevent erosion by securing the soil with erosion control fabric, or seed with fast-growing grasses as soon as possible. Place fiber rolls down-slope until soil is secure.
- If you suspect contamination (from site history, discoloration, odor, texture, abandoned underground tanks or pipes, or buried debris), call the Engineer for help in determining what should be done, and manage disposal of cntaminated soil according to their instructions.

Dewatering operations

- Effectively manage all run-on, all runoff within the site, and all runoff that discharges from the site. Run-on from off site shall be directed away from all disturbed areas or shall collectively be in compliance.
- Reuse water for dust control, irrigation, or another on-site purpose to the greatest extent possible.

- Be sure to notify and obtain approval from the Engineer before discharging water to a street, gutter, or storm drain. Filtration or diversion through a basin, tank, or sediment trap may be required.
- In areas of known contamination, testing is required prior to reuse or discharge of groundwater. Consult with the Engineer to determine what testing is required and how to interpret results. Contaminated groundwater must be treated or hauled off-site for proper disposal.

Saw cutting

- Always completely cover or barricade storm drain inlets when saw cutting. Use filter fabric, catch basin inlet filters, or sand/gravel bags to keep slurry out of the storm drain system.
- Shovel, absorb, or vacuum saw-cut slurry and pick up all waste as soon as you are finished in one location or at the end of each work day (whichever is sooner!).
- If saw cut slurry enters a catch basin, clean it up immediately.

Paving/asphalt work

- Always cover storm drain inlets and manholes when paving or applying seal coat, tack coat, slurry seal, or fog seal.
- Protect gutters, ditches, and drainage courses with sand/gravel bags, or earthen berms.
- Do not sweep or wash down excess sand from sand sealing into gutters, storm drains, or creeks. Collect sand and return it to the stockpile, or dispose of it as trash.
- Do not use water to wash down fresh asphalt concrete pavement.

Concrete, grout, and mortar storage & waste disposal

- Store concrete, grout, and mortar under cover, on pallets, and away from drainage areas. These materials must never reach a storm drain.
- Wash out concrete equipment/trucks off-site or into contained washout areas that will not allow discharge of wash water onto the underlying soil or onto the surrounding areas.

- Collect the wash water from washing exposed aggregate concrete and remove it for appropriate disposal off site.

Painting

- Never rinse paint brushes or materials in a gutter or street!
- Paint out excess water-based paint before rinsing brushes, rollers, or containers in a sink.
- Paint out excess oil-based paint before cleaning brushes in thinner.
- Filter paint thinners and solvents for reuse whenever possible. Dispose of oil-based paint sludge and unusable thinner as hazardous waste.

Landscape Materials

- Contain, cover, and store on pallets all stockpiled landscape materials (mulch, compost, fertilizers, etc.) during wet weather or when rain is forecasted or when not actively being used within 14 days.
- Discontinue the application of any erodible landscape material within 2 days of forecasted rain and during wet weather.

Storm drain polluters may be liable for fines of $10,000 or more per day!

For references and more detailed information:
www.cleanwaterprogram.org
www.cabmphandbooks.com

Know what's below. Call before you dig.

RAMSEY CIVIL ENGINEERING INC
CIVIL ENGINEERING
LAND PLANNING
PROJECT MANAGEMENT
CONSTRUCTION SUPPORT
QSD AND QSP SERIVCES
2905 KRISTIE COURT
SANTA CRUZ, CA 95065
TEL (831) 462-2905
www.ramseycivilengineering.com

REGISTERED PROFESSIONAL ENGINEER DAVID RAMSEY NO. C73735 CIVIL STATE OF CALIFORNIA

DAVID RAMSEY DATE
RCE# 73735

APN# 424-08-059

PLAN TYPE

CLEAN BAY BLUE PRINT

YUKI FARMS
14790 OKA ROAD, LOS GATOS, CA

NUMBER	BY	DESCRIPTION	DATE
REVISION BLOCK			

DRAWN BY:	DMR
DESIGNED BY:	DMR
DATE:	8/28/2020
SCALE:	AS NOTED
PROJECT NO:	20-004
SHEET:	C5

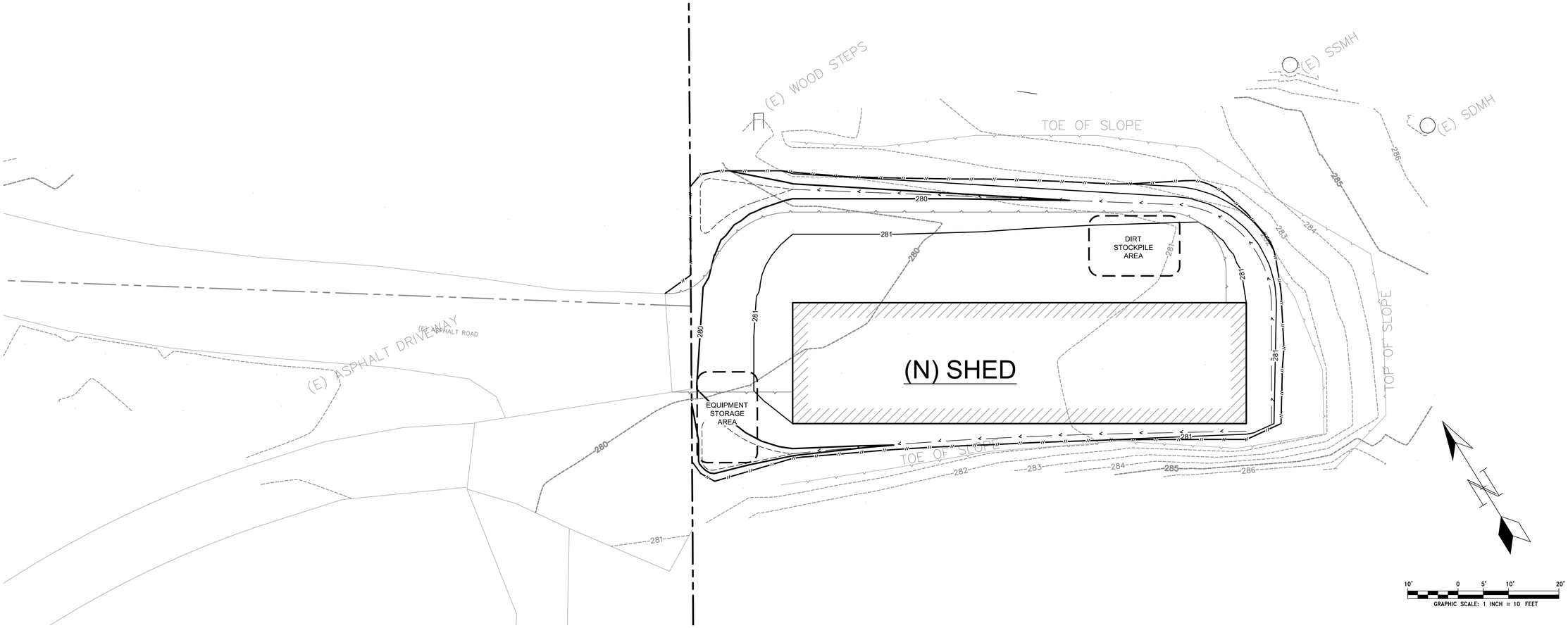

CONSTRUCTION MANAGEMENT PLAN

CONSTRUCTION HOURS

1. WEEKDAYS 8:00AM-8:00PM
2. WEEKENDS & HOLIDAYS 9:00AM-7:00PM

CONSTRUCTION HOURS INCLUDE:

ALL CONSTRUCTION ACTIVITIES, INCLUDING THE DELIVERY OF CONSTRUCTION MATERIALS, LABORS, HEAVY EQUIPMENT, SUPPLIES, ETC.

THE TOWN MAY AUTHORIZE, ON A CASE-BY-CASE BASIS, ALTERNATE CONSTRUCTION HOURS. THE OWNER OR APPLICANT SHALL PROVIDE WRITTEN NOTICE TWENTY-FOUR (24) HOURS IN ADVANCE OF MODIFIED CONSTRUCTION HOURS. APPROVAL OF THIS REQUEST IS AT DISCRETION OF THE TOWN.

EARTH MOVEMENT PLAN

1. EXCAVATE BUILDING FOOTINGS AND PERIMETER FOUNDATION
2. STOCKPILE SPOILS IN DESIGNATED AREA FOR EXPORT
3. WATER SHALL BE USED FOR DUST CONTROL WHILE EARTH MOVEMENT IS ACTIVE
4. STOCKPILED SOILS SHALL BE COVERED IMMEDIATELY IF NOT SCHEDULED TO BE USED OF EXPORTED WITHIN 14 DAYS

PRELIMINARY PROJECT SCHEDULE

1. INSTALL SEDIMENT AND EROSION CONTROL MEASURES - 1 WEEK
2. ROUGH GRADE BUILDING PAD AND DRAINAGE SWALES - 1 WEEK
3. EXCAVATE FOOTINGS AND PERIMETER FOUNDATION - 2 WEEKS
4. FORM AND POUR FOOTINGS AND BUILDING SLAB - 3 WEEKS
5. STRIP FORMS AND INSTALL STEEL STRUCTURE - 5 WEEKS
6. FINISH GRADE SITE AND CONSTRUCT DRAINAGE SWALES - 1 WEEKS
7. FINISH OPERATIONS AND SITE CLEAN UP - 1 WEEK

TOTAL TIME REQUIRED 14 WEEKS

RAMSEY
CIVIL ENGINEERING INC
CIVIL ENGINEERING
LAND PLANNING
PROJECT MANAGEMENT
CONSTRUCTION SUPPORT
QSD AND QSP SERVICES
2905 KRISTIE COURT
SANTA CRUZ, CA 95065
TEL (831) 462-2905
www.ramseycivilengineering.com

REGISTERED PROFESSIONAL ENGINEER
DAVID RAMSEY
NO. C73735
CIVIL
STATE OF CALIFORNIA

DAVID RAMSEY DATE
RCE# 73735

APN# 424-08-059

PLAN TYPE

CONSTRUCTION MANAGEMENT PLAN

YUKI FARMS

14790 OKA ROAD, LOS GATOS, CA

NUMBER	BY	DESCRIPTION	DATE

REVISION BLOCK

811 Know what's below. Call before you dig.

DRAWN BY:	DMR
DESIGNED BY:	DMR
DATE:	8/28/2020
SCALE:	AS NOTED
PROJECT NO:	20-004
SHEET:	C6

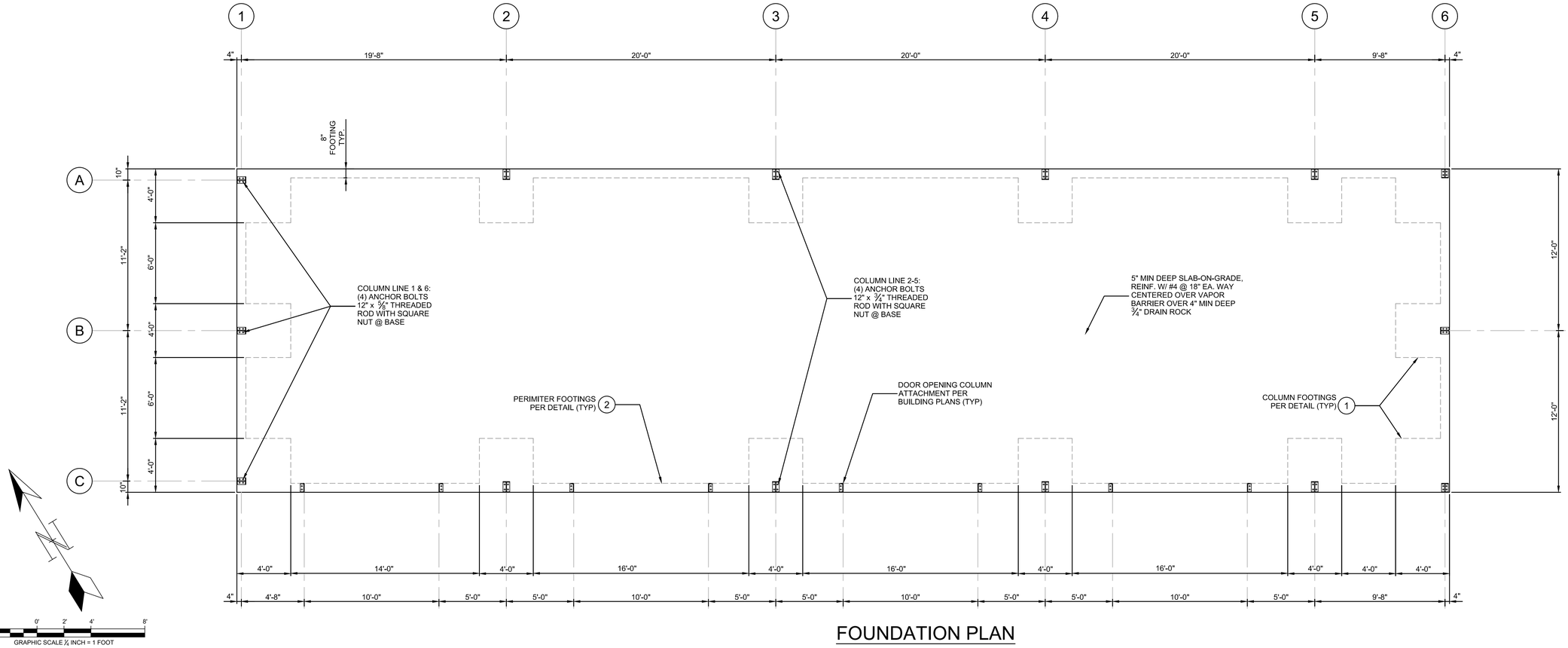

GRAPHIC SCALE ¼ INCH = 1 FOOT

FOUNDATION PLAN

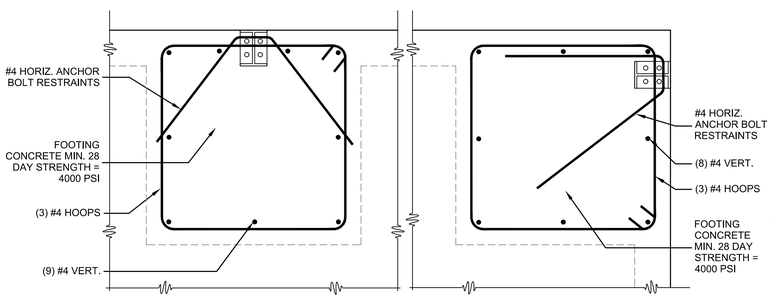

PLAN VIEW @ MID-WALL

PLAN VIEW @ CORNER

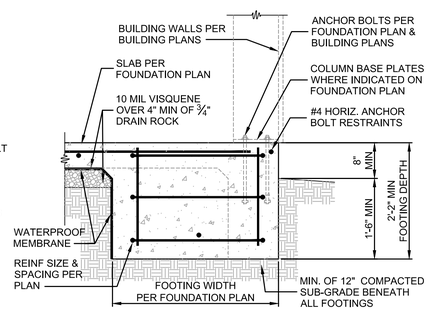

SECTION VIEW

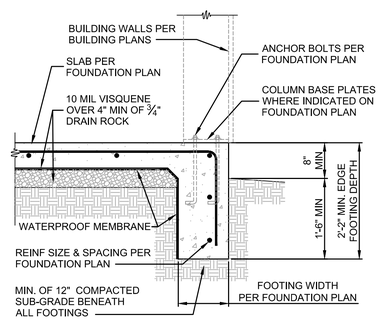

SECTION VIEW

COLUMN FOOTING

SCALE ¾"=1'-0" 1

EDGE FOOTING

SCALE ¾"=1'-0" 2

1' 0' 1' 2' 4'

GRAPHIC SCALE ¾ INCH = 1 FOOT

FOUNDATION NOTES:

ALL WORK SHALL COMPLY WITH THE 2019 CALIFORNIA BUILDING CODE.

FIELD VERIFY ALL DIMENSIONS PRIOR TO BEGINNING THE WORK.

CONCRETE SHALL DEVELOP A MINIMUM COMPRESSIVE STRENGTH OF 4000 PSI AT 28 DAYS.

ALL BOLTS SHALL CONFORM TO A.S.T.M. A307.

REINFORCING STEEL SHALL BE GRADE 60 AND SHALL COMPLY WITH ASTM A-615. LAP BARS A MINIMUM OF 32 X BAR AREA AT ALL SPLICES CORNERS, AND INTERSECTIONS (12" MIN).

VERIFY SIZE AND LOCATION OF ANCHOR BOLTS AND COLUMN BASE PLATES WITH BUILDING PLANS PRIOR TO POURING CONCRETE.

RAMSEY
CIVIL ENGINEERING INC

CIVIL ENGINEERING
LAND PLANNING
PROJECT MANAGEMENT
CONSTRUCTION SUPPORT
QSD AND QSP SERIVCES

2905 KRISTIE COURT
SANTA CRUZ, CA 95065
TEL (831) 462-2905
www.ramseycivilengineering.com

REGISTERED PROFESSIONAL ENGINEER
DAVID RAMSEY
NO. C73735
CIVIL
STATE OF CALIFORNIA

DAVID RAMSEY DATE
RCE# 73735

APN# 424-08-059

PLAN TYPE

EROSION & SEDIMENT CONTROL PLAN

YUKI FARMS

14790 OKA ROAD, LOS GATOS, CA

NUMBER	BY	DESCRIPTION	DATE
REVISION BLOCK			

811 Know what's below. Call before you dig.

DRAWN BY:	DMR
DESIGNED BY:	DMR
DATE:	8/28/2020
SCALE:	AS NOTED
PROJECT NO:	20-004
SHEET:	F1

BUILDER/CONTRACTOR RESPONSIBILITIES

Drawing Validity – These drawings, supporting structural calculations and design certification are based on the order documents as of the date of these drawings. These documents describe the material supplied by the manufacturer as of the date of these drawings. Any changes to the order documents after the date on these drawings may void these drawings, supporting structural calculations and design certification. The Builder/Contractor is responsible for notifying the building authority of all changes to the order documents which result in changes to the drawings, supporting structural calculations and design certification.

Builder Acceptance of Drawings – Approval of the manufacturer's drawings and design data affirms that the manufacturer has correctly interpreted and applied the requirements of the order documents and constitutes Builder/Contractor acceptance of the manufacturer's interpretations of the order documents and standard product specifications, including its design, fabrication and quality criteria standards and tolerances. (AISC code of standard practice Sept 86 Section 4.2.1) (Mar 05 Section 4.4.1)

Code Official Approval – It is the responsibility of the Builder/Contractor to ensure that all project plans and specifications comply with the applicable requirements of any governing building authority. The Builder/Contractor is responsible for securing all required approvals and permits from the appropriate agency as required.

Builder is responsible for State, Federal and OSHA safety compliance – The Builder/Contractor is responsible for applying and observing all pertinent safety rules and regulations and OSHA standards as applicable.

Building Erection – The Builder/Contractor is responsible for all erection of the steel and associated work in compliance with the Metal Building Manufacturers drawings. Temporary supports, such as temporary guys, braces, false work or other elements required for erection will be determined, furnished and installed by the erector. (AISC Code of Standard Practice Sept 86 Section 7.9.1) (Mar 05 Section 7.10.3)

Discrepancies – Where discrepancies exist between the Metal Building plans and plans for other trades, the Metal Building plans will govern. (AISC Code of Standard Practice Sept 86 Section 3.3) (Mar 05 Section 3.3)

Materials by Others – All interface and compatibility of any materials not furnished by the manufacturer are the responsibility of and to be coordinated by the Builder/Contractor or A/E firm. Unless specific design criteria concerning any interface between materials if furnished as a part of the order documents, the manufacturers assumptions will govern.

Modification of the Metal Building from Plans – The Metal Building supplied by the manufacturer has been designed according to the Building Code and specifications and the loads shown on this drawing. Modification of the building configuration, such as removing wall panels or braces, from that shown on these plans could affect the structural integrity of the building. The Metal Building Manufacturer or a Licensed Structural Engineer should be consulted prior to making any changes to the building configuration shown on these drawings. The Metal Building Manufacturer will assume no responsibility for any loads applied to the building not indicated on these drawings.

Foundation Design – The Metal Building Manufacturer is not responsible for the design, materials and workmanship of the foundation. Anchor rod plans prepared by the manufacturer are intended to show only location, diameter and projection of the anchor rods required to attach the Metal Building System to the foundation. It is the responsibility of the end customer to ensure that adequate provisions are made for specifying rod embedment, bearing values, tie rods and or other associated items embedded in the concrete foundation, as well as foundation design for the loads imposed by the Metal Building System, other imposed loads, and the bearing capacity of the soil and other conditions of the building site. (MBMA 06 Sections 3.2.2 and A3)

PROJECT NOTES

Material properties of steel bar, plate, and sheet used in the fabrication of built–up structural framing members conform to ASTM A529, ASTM A572, ASTM A1011 SS, or ASTM A1011 HSLAS with a minimum yield point of 50 ksi. Material properties of hot rolled structural shapes conform to ASTM A992, ASTM A529, or ASTM A572 with a minimum specified yield point of 50 ksi. Hot rolled angles, or other than flange braces, conform to ASTM 36 minimum. Hollow structural shaped conform to ASTM A500 grade b, minimum yield point is 42 ksi for round HSS and 46 ksi for rectangular HSS. Material properties of cold form light gage steel members conform to the requirements of ASTM A1011 SS Grade 55 or ASTM A1011 HSLAS Class 1 Grade 55, with a minimum yield point of 55 ksi.

The manufacturer does not assume any responsibility for the erection nor field supervision of the structure and or any special inspections that may be required by the local building authority during erection (including inspection of the high strength bolts or field welds) as required during erection. The coordination and the costs associated for setting up and Special Inspections are the responsibility of the Erector, Owner, Architect, or Engineer of Record.

Design is based upon the more severe loading of either the roof snow load or the roof live load.

Loads, as noted, are given within order documents and are applied in general accordance with the applicable provisions of the model code and/or specification indicated. Neither the manufacture nor the certifying engineer declares or attests that the loads as designated are proper for the local provisions that may apply or for site specific parameters. The manufacturer's Engineer's certification is limited to design loads supplied by an Architect and/or engineer of record for the overall construction project.

This project is designed using manufacture's standard serviceability standards. Generally this means that all stresses and deflections are within typical performance limits for normal occupancy and standard metal building products. If special requirements for deflections and vibrations must be adhered to, then they must be clearly stated in the contract documents.

This metal building system is designed as enclosed. All exterior components (i.e. doors, windows, vents, etc.) must be designed to withstand the specified wind loading for the design of components and cladding in accordance with the specified building code. Doors are to be closed when a maximum of 50% of design wind velocity is reached.

DESIGN LOADING

THIS STRUCTURE IS DESIGNED UTILIZING THE LOADS INDICATED AND APPLIED AS REQUIRED BY:

CBC 16

THE BUILDER IS TO CONFIRM THAT THESE LOADS COMPLY WITH THE REQUIREMENTS OF THE LOCAL BUILDING DEPARTMENT.

ROOF DEAD LOAD
- SUPERIMPOSED: 2.080 PSF
- COLLATERAL: 0.500 PSF

ROOF LIVE LOAD: 20.00 PSF (REDUCIBLE)

- RISK CATEGORY: II – Normal

SNOW LOAD
- GROUND SNOW LOAD (Pg): 0.0000 PSF
- SNOW LOAD IMPORTANCE FACTOR (Is): 1.0000
- FLAT ROOF SNOW LOAD (Pf): 0.00 PSF
- SNOW EXPOSURE FACTOR (Ce): 1.00
- THERMAL FACTOR (Ct): 1.00

WIND LOAD
- ULTIMATE WIND SPEED: 115 MPH
- NOMINAL WIND SPEED (Vasd): 89 MPH (IBC SECTION 1609.3.1)
- SERVICEABILITY WIND SPEED: 72 MPH
- WIND EXPOSURE CATEGORY: C
- TOPOGRAPHICAL FACTOR: 1.0
- INTERNAL PRESSURE COEFFICIENT (GCpi): 0.18 /–0.18
- ZONE 4, COMPONENT WIND LOAD ≤ 10FT^2
  28.864 PSF PRESSURE –31.310 PSF SUCTION
- ZONE 5, COMPONENT WIND LOAD < 10FT^2
  28.864 PSF PRESSURE –38.575 PSF SUCTION
- ZONES PER ASCE 7–10; FIG. 30.4–1
- ZONES PRESSURES SHOWN ARE UN–FACTORED

RAIN INTENSITY
- 5–MINUTE DURATION, 5–YEAR RECURRENCE (I1): 2.6000 IN/HOUR

SEISMIC LOAD
- SEISMIC IMPORTANCE FACTOR (Ie): 1.00
- S_S 2.3209 g — S_{DS} 1.0000 g
- S_1 0.8401 g — S_{D1} 0.8400 g
- SITE CLASS: D (STIFF SOIL)
- SEISMIC DESIGN CATEGORY: E

ANALYSIS PROCEDURE: EQUIVALENT LATERAL FORCE

COLUMN LINE	2–5	1&6	SWA&SWC
BASIC FORCE RESISTING SYSTEM*	C4	B3	B3
RESPONSE MODIFICATION COEFFICIENT(R)	3.25	3.25	3.25
SYSTEM OVER–STRENGTH FACTOR(Ω_0)	2.5000	2.0000	2.0000
SEISMIC RESPONSE COEFFICIENT(C_S)	0.308	0.308	0.308

BLDG DESIGN BASE SHEAR (V) TRANSVERSE 4.00 (k) LONGITUDINAL 3.78 (k)

THE TRANSVERSE DIRECTION IS PARALLEL TO THE RIGID FRAMES
THE LONGITUDINAL DIRECTION IS PERPENDICULAR TO THE RIGID FRAMES
BASIC STRUCTURAL SYSTEM (FROM ASCE 7–10 TABLE 12.2–1)
Cs IS DETERMINED USING AN Ss=1.5 AS PER SECTION 12.8.1.3 OF ASCE 7–10

BASIC FORCE RESISTING SYSTEM*
C4. STEEL ORDINARY MOMENT FRAME
B3. STEEL ORDINARY CONCENTRIC BRACED FRAMES

DRAWING INDEX

PAGE	DESCRIPTION
C1	COVER SHEET
F1	ANCHOR BOLT PLAN
F2	ANCHOR BOLT REACTIONS
F3	ANCHOR BOLT DETAILS
E1	ROOF FRAMING PLAN
E2	ROOF SHEETING PLAN
E3	FRONT SIDEWALL
E4	BACK SIDEWALL
E5	LEFT ENDWALL
E6	RIGHT ENDWALL
E7	FRAME CROSS SECTION
DET1–9	STANDARD DETAILS

DRAWING STATUS

☐ FOR APPROVAL
THESE DRAWINGS, BEING FOR APPROVAL, ARE BY DEFINITION NOT FINAL, AND ARE FOR CONCEPTUAL REPRESENTATION ONLY. THEIR PURPOSE IS TO CONFIRM PROPER INTERPRETATION OF THE PROJECT DOCUMENTS. ONLY DRAWINGS ISSUED "FOR ERECTOR INSTALLATION" CAN BE CONSIDERED AS COMPLETE.

☒ FOR CONSTRUCTION PERMIT
THESE DRAWINGS, BEING FOR PERMIT, ARE BY DEFINITION NOT FINAL. ONLY DRAWINGS ISSUED "FOR ERECTOR INSTALLATION" CAN BE CONSIDERED AS COMPLETE.

☐ FOR ERECTOR INSTALLATION
FINAL DRAWINGS FOR CONSTRUCTION.

ENGINEERING SEAL

THIS CERTIFICATION COVERS PARTS MANUFACTURED AND DELIVERED BY THE MANUFACTURER ONLY, AND EXCLUDES PARTS SUCH AS DOORS, WINDOWS, FOUNDATION DESIGN AND ERECTION OF THE BUILDING.

THESE DRAWINGS AND THE METAL BUILDING SYSTEM THEY REPRESENT ARE THE PRODUCT OF AN AFFILIATE OF NCI GROUP, INC. – 10943 N. SAM HOUSTON PARKWAY W., HOUSTON, TX 77064. THE PROFESSIONAL ENGINEER WHOSE SEAL APPEARS HEREON IS EMPLOYED BY AN AFFILIATE OF NCI GROUP, INC. AND IS NOT THE ENGINEER–OF–RECORD FOR THE OVERALL PROJECT.

THE ENGINEER WHOSE SEAL APPEARS HEREON IS AN EMPLOYEE FOR THE MANUFACTURER, NCI GROUPS, INC. OR ONE OF ITS AFFILIATES, FOR THE MATERIALS DESCRIBED HEREIN. SAID SEAL OR CERTIFICATION IS LIMITED TO THE PRODUCTS DESIGNED AND MANUFACTURED BY MANUFACTURER ONLY. THE UNDERSIGNED ENGINEER IS NOT THE OVERALL ENGINEER OF RECORD FOR THIS PROJECT.

1/2"ø A325 BOLT GRIP TABLE

GRIP	LENGTH
0 TO 9/16"	1 1/4" F.T.
Over 9/16" TO 1 1/16"	1 3/4" F.T.
Over 1 1/16" TO 1 5/16"	2"
Over 1 5/16" TO 1 9/16"	2 1/4"
Over 1 9/16" TO 1 13/16"	2 1/2"
Over 1 13/16" TO 2 1/16"	2 3/4"
LOCATIONS OF BOLTS LONGER THAN 2 3/4" NOTED ON ERECTION DRAWINGS	
F.T. DENOTES FULLY THREADED	

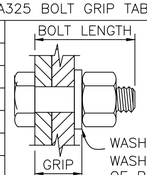

NOTE:
FULL THREAD ENGAGEMENT IS DEEMED TO HAVE BEEN MET WHEN THE END OF THE BOLT IS FLUSH WITH THE FACE OF THE NUT.

WASHER REQUIRED ONLY WHEN SPECIFIED. WASHER MAY BE LOCATED UNDER HEAD OF BOLT, UNDER NUT, OR AT BOTH AT LOCATIONS NOTED ON ERECTION DRAWINGS. ADD 5/32" FOR EACH WASHER TO MATERIAL THICKNESS TO DETERMINE GRIP.

Rev. 4/4/2017

BUILDING SIZE: 24'–0" x 90'–0" x 10'–0" 4.0:12

ISSUE	DATE	DESCRIPTION	BY	CK'D	DSN
A	3/ 5/18	FOR CONSTRUCTION PERMIT	CHB	MMH	EPR

GENERAL STEEL CORPORATION
10639 W. BRADFORD RD PHONE : 800–406–5126
LITTLETON, CO 80127–4208 FAX : 303–979–0084

PROJECT: DENNIS SHEAN
CUSTOMER: YUKI FARMS OWNER: YUKI FARMS
LOCATION: LOS GATOS, CA 95032–1920 US

CAD	DATE	SCALE	PHASE	BUILDING ID	JOB NUMBER	SHEET NUMBER	ISSUE
	3/ 5/18	N.T.S.	1	A	16–B–39553	C1	A

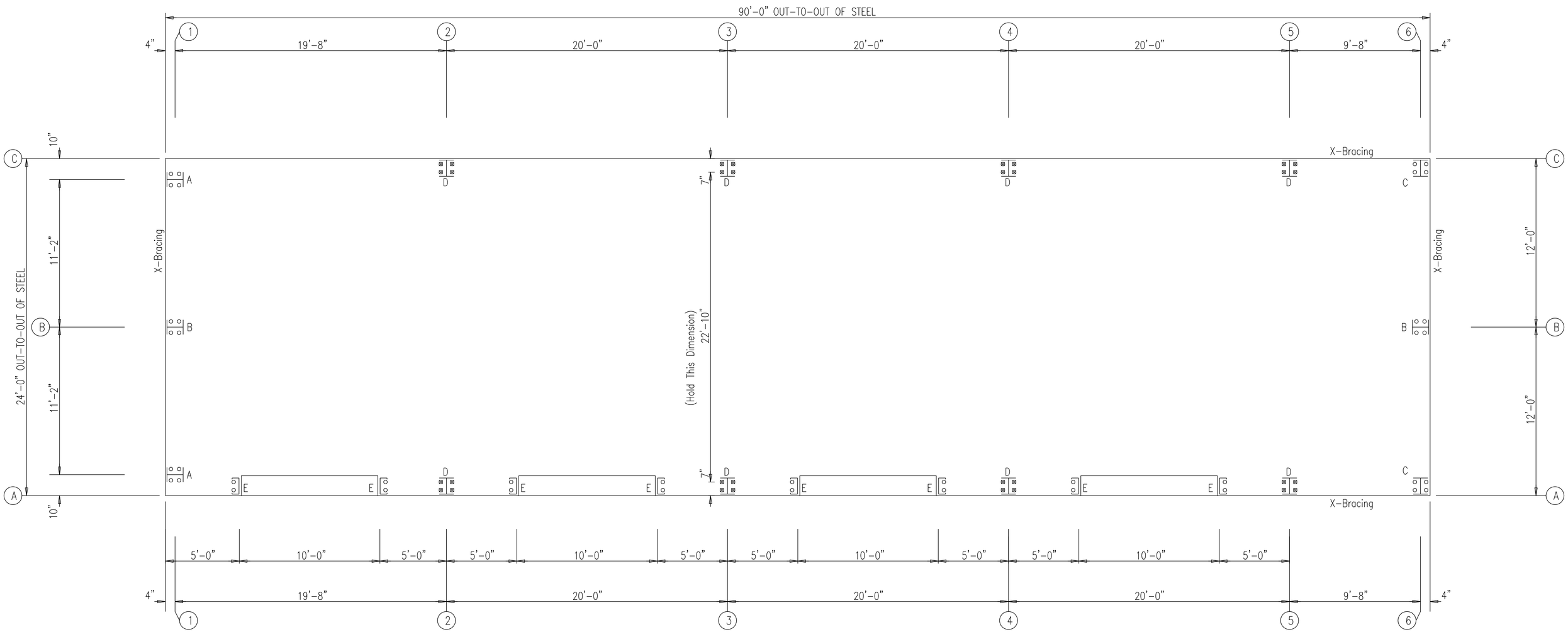

ANCHOR BOLT PLAN

NOTE: ALL BASE PLATES @ 100.0' (U.N.)
ASSUMED FINISH FLOOR @ 100.0' (U.N.)

ISSUE	DATE	DESCRIPTION	BY	CK'D	DSN
0	3/ 5/18	FOR ERECTOR INSTALLATION	CHB	MMH	EPR

GENERAL STEEL CORPORATION
10639 W. BRADFORD RD PHONE : 800-406-5126
LITTLETON, CO 80127-4208 FAX : 303-979-0084

PROJECT: DENNIS SHEAN
CUSTOMER: YUKI FARMS OWNER: YUKI FARMS
LOCATION: LOS GATOS, CA 95032-1920 US

CAD	DATE	SCALE	PHASE	BUILDING ID	JOB NUMBER	SHEET NUMBER	ISSUE
	3/ 5/18	N.T.S.	1	A	16-B-39553	F1	0

BUILDING BRACING REACTIONS

Wall Loc	Wall Line	Col Line	Reactions in plane of wall ± Reactions(k) Wind Horz	Wind Vert	Seismic Horz	Seismic Vert	Panel_Shear (lb/ft) Wind	Seis
L_EW	1	C,B	Bracing, see EW reactions					
F_SW	A	5,6	1.4	*	1.9	*		
R_EW	6	B,C	Bracing, see EW reactions					
B_SW	C	6,5	1.4	*	1.9	*		

*See RF reactions table for vertical and horizontal reactions in plane of the rigid frame.

NOTES FOR REACTIONS

BUILDING REACTIONS ARE BASED ON THE FOLLOWING BUILDING DATA:

WIDTH (FT)	= 24
LENGTH (FT)	= 90
EAVE HEIGHT (FT)	= 10 / 10
ROOF SLOPE (rise/12)	= 4.0:12 / 4.0:12
DEAD LOAD (psf)	= 2.080
COLLATERAL LOAD (psf)	= 0.5
ROOF LIVE LOAD (psf)	= 20.00 (REDUCIBLE)
FRAME LIVE LOAD (psf)	= 16.8
ROOF SNOW LOAD (psf)	= 0
GROUND SNOW LOAD (psf)	= 0.0000
WIND SPEED (MPH)	= 115
WIND CODE	= CBC 16
EXPOSURE	= C
CLOSED/OPEN	= Closed
IMPORTANCE – WIND	= 1.00
IMPORTANCE – SEISMIC	= 1.00
SEISMIC ZONE	= E
NOMINAL WIND SPEED (Vasd)	= 89 MPH (IBC SECTION 1609.3.1)
SERVICEABILITY WIND SPEED	= 72 MPH

REACTION KEY:

WIND Left/Right 1 = (with +GCpi Internal Pressure)
WIND Left/Right 2 = (with –GCpi Internal Pressure)
Wind_Long 1 = Wind Load Case B at Left EW
Wind_Long 2 = Wind Load Case B at Right EW
MIN_SNOW = Minimum Snow (Pm) per code
E#UNB_SL_L = Endwall Unbalanced Snow Left
E#UNB_SL_R = Endwall Unbalanced Snow Right
F#UNB_SL_L = Rigid Frame Unbalanced Snow Left
F#UNB_SL_R = Rigid Frame Unbalanced Snow Right

ANCHOR BOLT SUMMARY

	Qty	Locate	Dia (in)	Type	Proj (in)
○	16	Jamb	5/8"	F1554	2.00
○	24	Endwall	5/8"	F1554	2.00
⊠	32	Frame	3/4"	F1554	2.50

GENERAL NOTES

1. THE REACTIONS PROVIDED ARE BASED ON THE ORDER DOCUMENTS AT THE TIME OF MAILING. ANY CHANGES TO BUILDING LOADS OR DIMENSIONS MAY CHANGE THE REACTIONS. THE REACTIONS WILL BE SUPERSEDED AND VOIDED BY ANY FUTURE MAILING.
2. REACTIONS ARE PROVIDED AS UN–FACTORED FOR EACH LOAD GROUP APPLIED TO THE COLUMN. THE FOUNDATION ENGINEER WILL APPLY THE APPROPRIATE LOAD FACTORS AND COMBINE THE REACTIONS IN ACCORDANCE WITH THE BUILDING CODE AND DESIGN SPECIFICATIONS TO DETERMINE BEARING PRESSURES AND CONCRETE DESIGN. THE FACTORS APPLIED TO LOAD GROUPS FOR THE STEEL COLUMN DESIGN MAY BE DIFFERENT THAN THE FACTORS USED IN THE FOUNDATION DESIGN.
3. THE MANUFACTURER DOES NOT PROVIDE "MAXIMUM" LOAD COMBINATION REACTIONS. HOWEVER, THE INDIVIDUAL LOAD REACTIONS PROVIDED MAY BE USED BY THE FOUNDATION ENGINEER TO DETERMINE THE APPLICABLE LOAD COMBINATIONS FOR HIS/HER DESIGN PROCEDURES AND ALLOW FOR AN ECONOMICAL FOUNDATION DESIGN
4. THE METAL BUILDING MANUFACTURER IS RESPONSIBLE FOR THE DESIGN OF THE ANCHOR BOLT DIAMETER ONLY TO PERMIT THE TRANSFER OF FORCES BETWEEN THE BASE PLATE AND THE ANCHOR BOLT IN SHEAR, BEARING AND TENSION, BUT IS NOT RESPONSIBLE FOR THE ANCHOR BOLT EMBEDMENT FOR TRANSFER OF FORCES TO THE FOUNDATION. THE METAL BUILDING MANUFACTURER DOES NOT DESIGN AND IS NOT RESPONSIBLE FOR THE DESIGN, MATERIAL AND CONSTRUCTION OF THE FOUNDATION EMBEDMENTS. THE END USE CUSTOMER SHOULD ASSURE HIMSELF THAT ADEQUATE PROVISIONS ARE MADE IN THE FOUNDATION DESIGN FOR LOADS IMPOSED BY COLUMN REACTIONS OF THE BUILDING, OTHER IMPOSED LOADS, AND BEARING CAPACITY OF THE SOIL AND OTHER CONDITIONS OF THE BUILDING SITE. IT IS RECOMMENDED THAT THE ANCHORAGE AND FOUNDATION OF THE BUILDING BE DESIGNED BY A REGISTERED PROFESSIONAL ENGINEER EXPERIENCED IN THE DESIGN OF SUCH STRUCTURES, (SECTION A3 MBMA 2006 METAL BUILDING SYSTEMS MANUAL)
5. BOTTOM OF ALL BASE PLATES ARE AT THE SAME ELEVATION. (UNLESS NOTED)
6. ANCHOR RODS ARE ASTM F1554 GRADE 36 MATERIAL UNLESS NOTED OTHERWISE.

FRAME LINES: 2 3 4 5

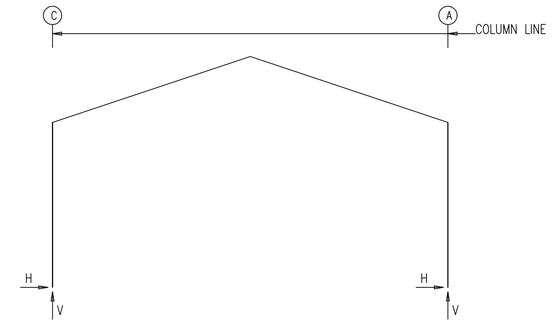

RIGID FRAME: ANCHOR BOLTS & BASE PLATES

Frm Line	Col Line	Anc._Bolt Qty	Dia	Base_Plate (in) Width	Length	Thick	Grout (in)
2*	C	4	0.750	6.000	9.500	0.375	0.0
2*	A	4	0.750	6.000	9.500	0.375	0.0

2* Frame lines: 2 3 4 5

RIGID FRAME: BASIC COLUMN REACTIONS (k)

Frame Line	Column Line	Dead Horiz	Dead Vert	Collateral Horiz	Collateral Vert	Live Horiz	Live Vert	Wind_Left1 Horiz	Wind_Left1 Vert	Wind_Right1 Horiz	Wind_Right1 Vert	Wind_Left2 Horiz	Wind_Left2 Vert
2*	C	0.2	0.8	0.0	0.1	1.4	4.0	–3.2	–5.5	1.0	–3.3	–3.4	–3.4
2*	A	–0.2	0.8	0.0	0.1	–1.4	4.0	–1.0	–3.3	3.2	–5.5	–0.7	–1.2

Frame Line	Column Line	Wind_Right2 Horiz	Wind_Right2 Vert	Wind_Long1 Horiz	Wind_Long1 Vert	Wind_Long2 Horiz	Wind_Long2 Vert	Seismic_Left Horiz	Seismic_Left Vert	Seismic_Right Horiz	Seismic_Right Vert	Seismic_Long Horiz	Seismic_Long Vert
2*	C	0.7	–1.2	0.6	–5.4	0.0	–5.1	–0.5	–0.4	0.5	0.4	0.0	–2.0
2*	A	3.4	–3.4	0.0	–5.1	–0.6	–5.4	–0.5	0.4	0.5	–0.4	0.0	–2.0

2* Frame lines: 2 3 4 5

ENDWALL COLUMN: BASIC COLUMN REACTIONS (k)

Frm Line	Col Line	Dead Vert	Collat Vert	Live Vert	Wind_Left1 Horz	Wind_Left1 Vert	Wind_Right1 Horz	Wind_Right1 Vert	Wind_Left2 Horz	Wind_Left2 Vert	Wind_Right2 Horz	Wind_Right2 Vert	Wind_Press Horz	Wind_Press Vert
1	C	0.2	0.0	1.0	1.2	–2.5	0.0	0.5	1.2	–1.9	0.0	1.1	0.0	0.0
1	B	0.6	0.1	2.9	0.0	–1.5	1.2	–4.5	0.0	–0.7	1.2	–3.6	–1.7	0.0
1	A	0.2	0.0	1.0	0.0	–1.2	0.0	–1.3	0.0	–0.6	0.0	–0.6	–0.7	0.0
6	A	0.2	0.0	0.5	0.0	–0.7	0.0	–0.7	0.0	–0.4	0.0	–0.4	0.0	–1.1
6	B	0.4	0.0	1.5	0.7	–2.6	0.0	–0.9	0.7	–2.1	0.0	–0.4	–1.7	0.0
6	C	0.2	0.0	0.5	0.0	0.3	0.7	–1.4	0.0	0.6	0.7	–1.1	0.0	–1.1

Frm Line	Col Line	Wind_Suct Horz	Wind_Suct Vert	Wind_Long1 Horz	Wind_Long1 Vert	Wind_Long2 Horz	Wind_Long2 Vert	Seis_Left Horz	Seis_Left Vert	Seis_Right Horz	Seis_Right Vert	Seis_Long Horz	Seis_Long Vert
1	C	0.0	0.0	0.0	–0.9	0.4	–1.2	0.6	–0.7	0.0	0.9	0.0	0.0
1	B	1.8	0.0	0.4	–3.4	0.0	–2.3	0.0	0.7	0.6	–0.9	0.0	0.0
1	A	0.7	0.0	0.0	–0.7	0.0	–1.5	0.0	–0.1	0.0	0.1	0.0	0.0
6	A	0.0	1.1	0.0	–0.8	0.0	–0.4	0.0	0.0	0.0	0.0	–2.5	–2.0
6	B	1.8	0.0	0.0	–1.3	0.3	–1.9	0.4	–0.6	0.0	0.4	0.0	0.0
6	C	0.0	1.1	0.3	–0.7	0.0	–0.5	0.0	0.5	0.4	–0.4	–2.5	–2.0

ENDWALL COLUMN: ANCHOR BOLTS & BASE PLATES

Frm Line	Col Line	Anc._Bolt Qty	Dia	Base_Plate (in) Width	Length	Thick	Grout (in)
1	C	4	0.625	6.000	8.000	0.375	0.0
1	B	4	0.625	6.000	8.000	0.375	0.0
1	A	4	0.625	6.000	8.000	0.375	0.0
6	A	4	0.625	6.000	8.000	0.375	0.0
6	B	4	0.625	6.000	8.000	0.375	0.0
6	C	4	0.625	6.000	8.000	0.375	0.0

ISSUE	DATE	DESCRIPTION	BY	CK'D	DSN
0	3/ 5/18	FOR ERECTOR INSTALLATION	CHB	MMH	EPR

GENERAL STEEL CORPORATION
10639 W. BRADFORD RD PHONE : 800–406–5126
LITTLETON, CO 80127–4208 FAX : 303–979–0084

PROJECT: DENNIS SHEAN
CUSTOMER: YUKI FARMS OWNER: YUKI FARMS
LOCATION: LOS GATOS, CA 95032–1920 US

CAD	DATE	SCALE	PHASE	BUILDING ID	JOB NUMBER	SHEET NUMBER	ISSUE
	3/ 5/18	N.T.S.	1	A	16–B–39553	F2	0

Dia= 5/8"

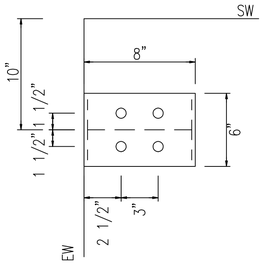

DETAIL A

Dia= 5/8"

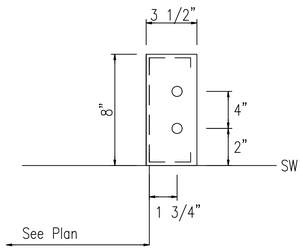

DETAIL E

Dia= 5/8"

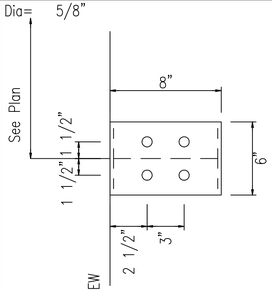

DETAIL B

Dia= 5/8"

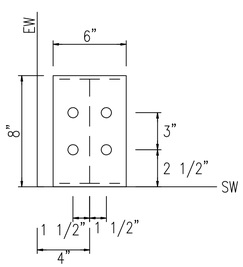

DETAIL C

Dia= 3/4"

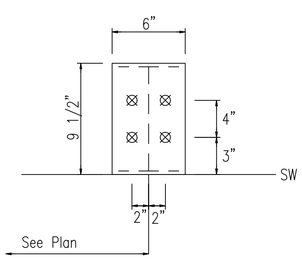

DETAIL D

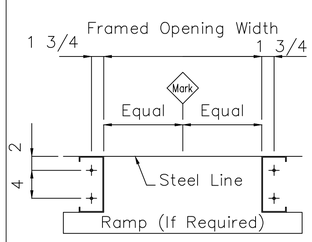

ARDia 5/8" Framed Opening AR Layout

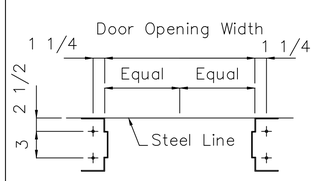

AR Dia 1/2" Walk Door AR Layout

ISSUE	DATE	DESCRIPTION	BY	CK'D	DSN
0	3/ 5/18	FOR ERECTOR INSTALLATION	CHB	MMH	EPR

GENERAL STEEL CORPORATION
10639 W. BRADFORD RD PHONE : 800-406-5126
LITTLETON, CO 80127-4208 FAX : 303-979-0084

PROJECT: DENNIS SHEAN
CUSTOMER: YUKI FARMS OWNER: YUKI FARMS
LOCATION: LOS GATOS, CA 95032-1920 US

CAD	DATE	SCALE	PHASE	BUILDING ID	JOB NUMBER	SHEET NUMBER	ISSUE
	3/ 5/18	N.T.S.	1	A	16-B-39553	F3	0

MEMBER TABLE ROOF PLAN		
MARK	PART	LENGTH
P-1	8X25Z16	21'-5 1/2"
P-2	8X25Z16	22'-11 1/2"
P-3	8X25Z16	11'-5 1/2"
P-4	8X25Z16	21'-5 1/2"
P-5	8X25Z16	11'-5 1/2"
E-1	8ES4L14	19'-11 1/2"
E-2	8ES4L14	19'-11 1/2"
E-3	8ES4L14	9'-11 1/2"
E-4	8ES4L14	9'-11 1/2"
E-5	8ES4L14	19'-11 1/2"
E-6	8ES4L14	19'-11 1/2"
CB-7	1/2" DIA. ROD	11'-6"
CB-8	1/2" DIA. ROD	12'-3"
CB-9	1/2" DIA. ROD	10'-9"

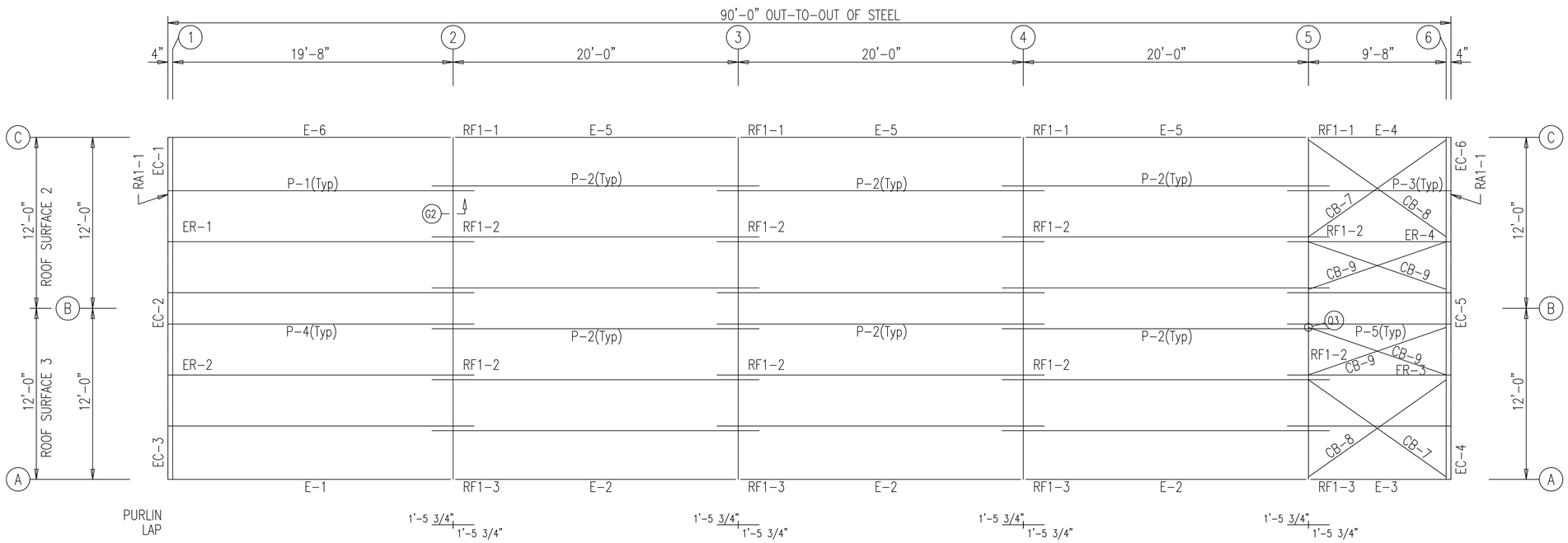

ROOF FRAMING PLAN

GENERAL NOTES:

1. INSTALL ALL PURLIN AND FLANGE BRACES (FB) AS SHOWN.
2. ROOF PANEL PROVIDES STRUCTURAL STABILITY TO THE BUILDING.
3. STRUT PURLINS, IF PROVIDED, MUST BE INSTALLED AND FASTENED TO ROOF SHEETING PER "PBR" PANEL ROOF DETAIL.
4. DO NOT ADD ANY ADDITIONAL ROOF OPENINGS WITHOUT BUILDING MANUFACTURER APPROVAL OR PROFESSIONAL ENGINEER APPROVAL.
5. DO NOT STACK SHEET BUNDLES ON ROOF. ONLY RAISE INDIVIDUAL SHEETS AS NEEDED.
6. AFTER INSTALLATION, WIPE ALL PANELS CLEAN OF METAL SHAVINGS CAUSED BY DRILLING.

ISSUE	DATE	DESCRIPTION	BY	CK'D	DSN
A	3/ 5/18	FOR CONSTRUCTION PERMIT	CHB	MMH	EPR

GENERAL STEEL CORPORATION
10639 W. BRADFORD RD PHONE : 800-406-5126
LITTLETON, CO 80127-4208 FAX : 303-979-0084

PROJECT: DENNIS SHEAN
CUSTOMER: YUKI FARMS
OWNER: YUKI FARMS
LOCATION: LOS GATOS, CA 95032-1920 US

CAD	DATE	SCALE	PHASE	BUILDING ID	JOB NUMBER	SHEET NUMBER	ISSUE
	3/ 5/18	N.T.S.	1	A	16-B-39553	E1	A

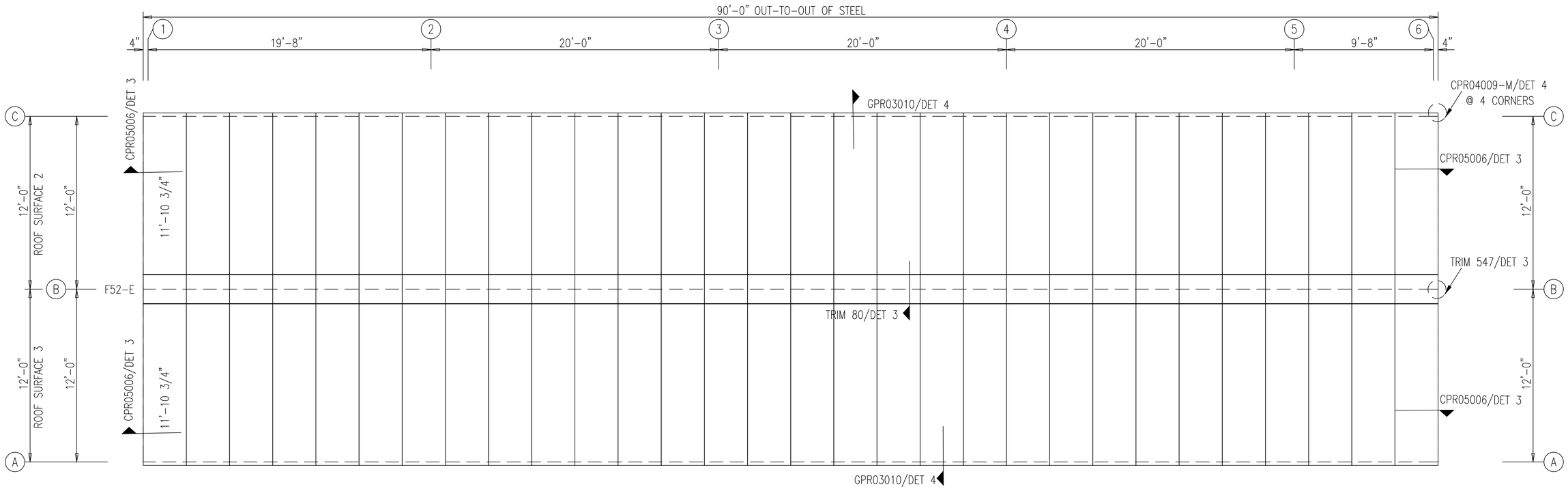

ROOF SHEETING PLAN

PANELS: 26 Gauge PBR – TBD

GENERAL NOTES:

1. INSTALL ALL PURLIN AND FLANGE BRACES (FB) AS SHOWN.
2. ROOF PANEL PROVIDES STRUCTURAL STABILITY TO THE BUILDING.
3. STRUT PURLINS, IF PROVIDED, MUST BE INSTALLED AND FASTENED TO ROOF SHEETING PER "PBR" PANEL ROOF DETAIL.
4. DO NOT ADD ANY ADDITIONAL ROOF OPENINGS WITHOUT BUILDING MANUFACTURER APPROVAL OR PROFESSIONAL ENGINEER APPROVAL.
5. DO NOT STACK SHEET BUNDLES ON ROOF. ONLY RAISE INDIVIDUAL SHEETS AS NEEDED.
6. AFTER INSTALLATION, WIPE ALL PANELS CLEAN OF METAL SHAVINGS CAUSED BY DRILLING.

ISSUE	DATE	DESCRIPTION	BY	CK'D	DSN
A	3/ 5/18	FOR CONSTRUCTION PERMIT	CHB	MMH	EPR

GENERAL STEEL CORPORATION

10639 W. BRADFORD RD PHONE : 800-406-5126
LITTLETON, CO 80127-4208 FAX : 303-979-0084

PROJECT: DENNIS SHEAN

CUSTOMER: YUKI FARMS OWNER: YUKI FARMS

LOCATION: LOS GATOS, CA 95032-1920 US

CAD	DATE	SCALE	PHASE	BUILDING ID	JOB NUMBER	SHEET NUMBER	ISSUE
	3/ 5/18	N.T.S.	1	A	16-B-39553	E2	A

MEMBER TABLE FRAME LINE A		
MARK	PART	LENGTH
DJ-1	8F35C14	8'-0"
E-1	8ES4L14	19'-11 1/2"
E-2	8ES4L14	19'-11 1/2"
E-3	8ES4L14	9'-11 1/2"
G-3	8X25Z16	4'-8"
G-4	8X25C16	19'-7 3/4"
G-5	8X25Z16	4'-4 1/4"
G-6	8X25C16	19'-4"
G-7	8X25Z16	8'-11 1/2"
CB-5	1/2" DIA. ROD	13'-5"
CB-6	1/2" DIA. ROD	13'-2"
JB-1	8F35C14	1'-2 11/16"

CONNECTION PLATES FRAME LINE A	
☐ ID	MARK/PART
1	PC30
2	SC587-L
3	SC587-R

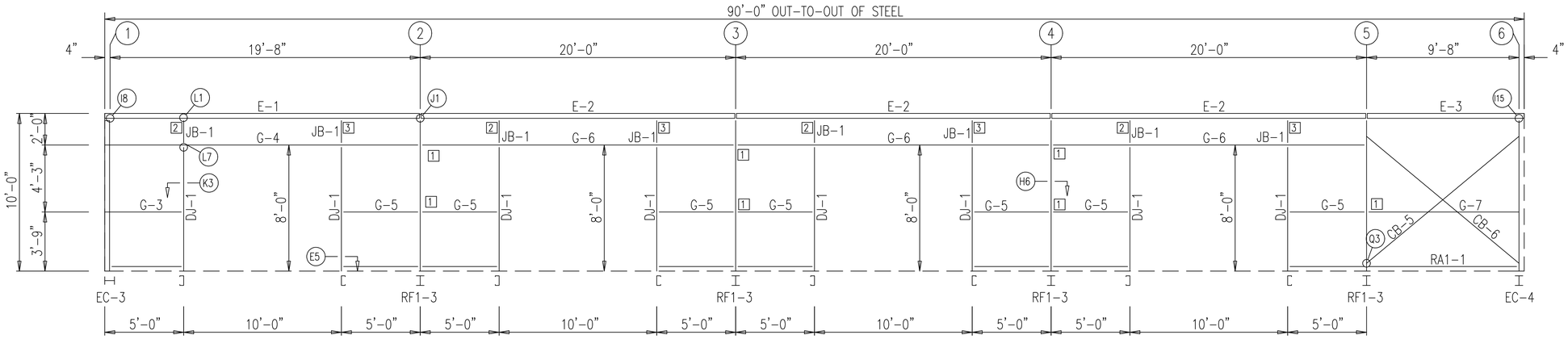

SIDEWALL FRAMING: FRAME LINE A

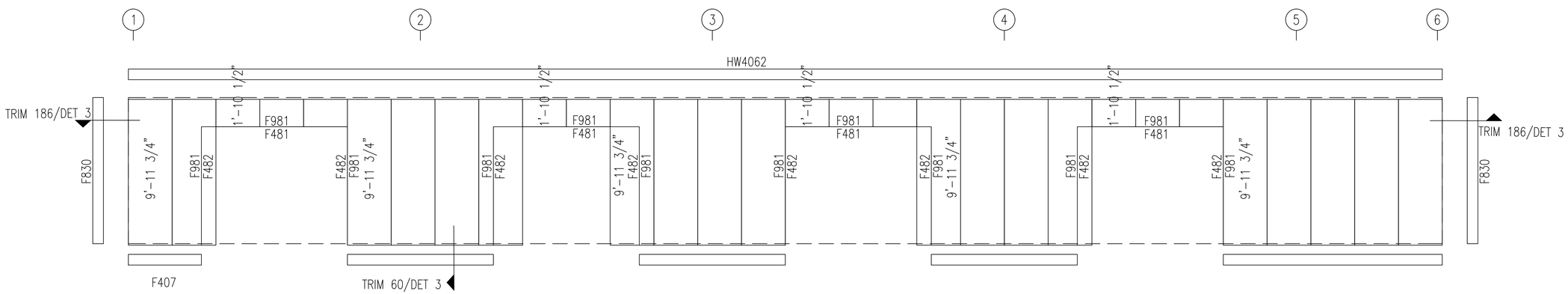

SIDEWALL SHEETING & TRIM: FRAME LINE A

PANELS: 26 Gauge PBR – Polar White

GENERAL NOTES:

1. INSTALL ALL GIRTS AND FLANGE BRACES (FB) AS SHOWN.
2. WALL PANEL PROVIDES STRUCTURAL STABILITY TO THE BUILDING.
3. OTHER THAN FOR WALK DOORS AND WINDOWS SHOWN ON THE CONTRACT, DO NOT ADD ADDITIONAL WALL OPENINGS WITHOUT APPROVAL OF BUILDING MANUFACTURER OR PROFESSIONAL ENGINEER.
4. AFTER INSTALLATION, WIPE ALL PANELS CLEAN OF METAL SHAVINGS CAUSED BY DRILLING.

ISSUE	DATE	DESCRIPTION	BY	CK'D	DSN
A	3/ 5/18	FOR CONSTRUCTION PERMIT	CHB	MMH	EPR

GENERAL STEEL CORPORATION

10639 W. BRADFORD RD PHONE : 800-406-5126

LITTLETON, CO 80127-4208 FAX : 303-979-0084

PROJECT: DENNIS SHEAN

CUSTOMER: YUKI FARMS OWNER: YUKI FARMS

LOCATION: LOS GATOS, CA 95032-1920 US

CAD	DATE	SCALE	PHASE	BUILDING ID	JOB NUMBER	SHEET NUMBER	ISSUE
	3/ 5/18	N.T.S.	1	A	16-B-39553	E3	A

MEMBER TABLE FRAME LINE C		
MARK	PART	LENGTH
E-4	8ES4L14	9'-11 1/2"
E-5	8ES4L14	19'-11 1/2"
E-6	8ES4L14	19'-11 1/2"
G-7	8X25Z16	8'-11 1/2"
G-8	8X25Z14	19'-4"
G-9	8X25Z14	19'-7 3/4"
CB-5	1/2" DIA. ROD	13'-5"
CB-6	1/2" DIA. ROD	13'-2"

CONNECTION PLATES FRAME LINE C	
☐ ID	MARK/PART
1	PC30

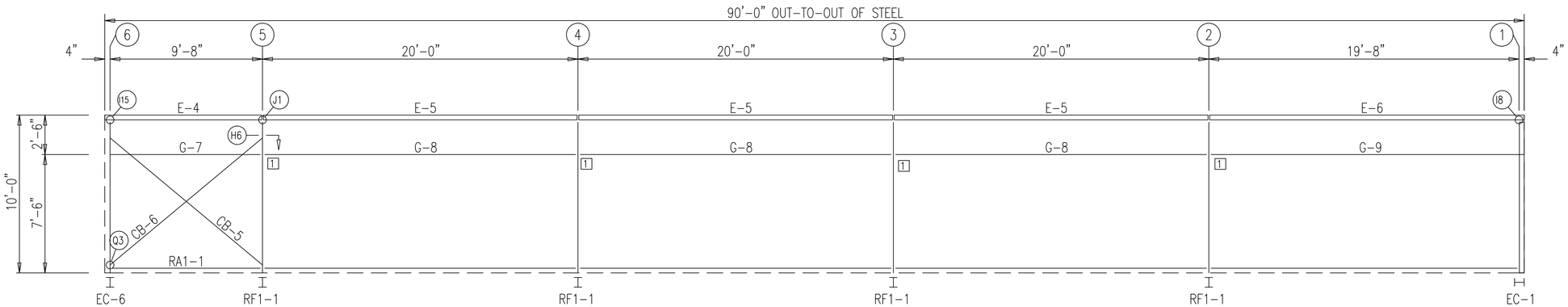

SIDEWALL FRAMING: FRAME LINE C

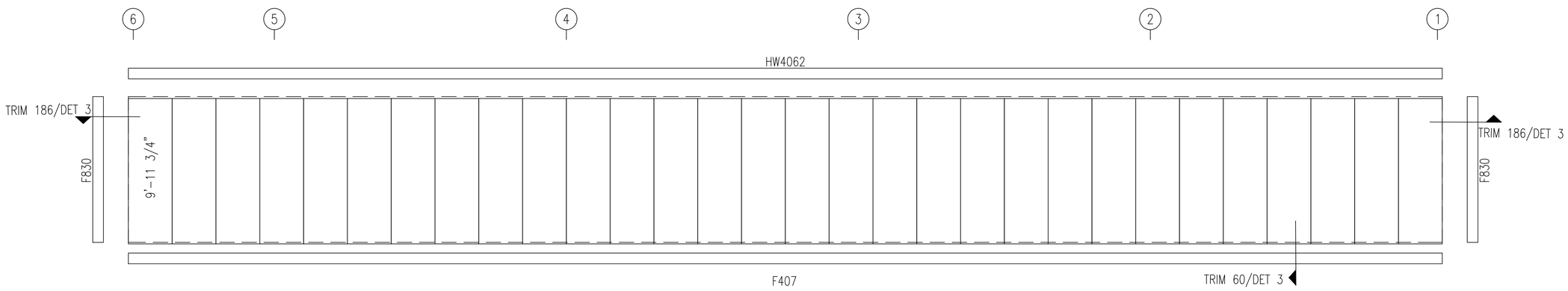

SIDEWALL SHEETING & TRIM: FRAME LINE C

PANELS: 26 Gauge PBR – Polar White

GENERAL NOTES:

1. INSTALL ALL GIRTS AND FLANGE BRACES (FB) AS SHOWN.
2. WALL PANEL PROVIDES STRUCTURAL STABILITY TO THE BUILDING.
3. OTHER THAN FOR WALK DOORS AND WINDOWS SHOWN ON THE CONTRACT, DO NOT ADD ADDITIONAL WALL OPENINGS WITHOUT APPROVAL OF BUILDING MANUFACTURER OR PROFESSIONAL ENGINEER.
4. AFTER INSTALLATION, WIPE ALL PANELS CLEAN OF METAL SHAVINGS CAUSED BY DRILLING.

ISSUE	DATE	DESCRIPTION	BY	CK'D	DSN
A	3/ 5/18	FOR CONSTRUCTION PERMIT	CHB	MMH	EPR

GENERAL STEEL CORPORATION
10639 W. BRADFORD RD PHONE : 800-406-5126
LITTLETON, CO 80127-4208 FAX : 303-979-0084

PROJECT: DENNIS SHEAN

CUSTOMER: YUKI FARMS OWNER: YUKI FARMS

LOCATION: LOS GATOS, CA 95032-1920 US

CAD	DATE	SCALE	PHASE	BUILDING ID	JOB NUMBER	SHEET NUMBER	ISSUE
	3/ 5/18	N.T.S.	1	A	16-B-39553	E4	A

BEARING FRAME ONLY!

WASHER TO BE USED AT ENDWALL COLUMN TO ENDWALL RAFTER CONNECTION. USE ONE WASHER ON COLUMN SIDE. WASHER NOT NEEDED ON CLIP SIDE.

BOLT TABLE
FRAME LINE 1

LOCATION	QUAN	TYPE	DIA	LENGTH
ER-1/ER-2	8	A325	5/8"	1 3/4"
Cor_Column/Raf	4	A325	1/2"	1 1/4"
EC-2/ER-2	4	A325	5/8"	1 1/4"

MEMBER TABLE
FRAME LINE 1

MARK	PART	LENGTH
EC-1	W8X10	8'-9 5/16"
EC-2	W8X10	12'-3 7/16"
EC-3	W8X10	8'-9 5/16"
ER-1	W8X10	12'-10 1/8"
ER-2	W8X10	12'-10 1/8"
G-1	8X25Z16	10'-6"
CB-1	1/2" DIA. ROD	16'-3"
CB-2	1/2" DIA. ROD	14'-1"

FLANGE BRACE TABLE
FRAME LINE 1

▽ ID	PART	LENGTH
FB29.3	L2X2X14G	2'-5 1/4"
FB6-1	L2X2X1/8"	2'-5 1/4"

CONNECTION PLATES
FRAME LINE 1

☐ ID	MARK/PART
1	SC-5
2	PC22-2
3	PC31-2
4	PC30

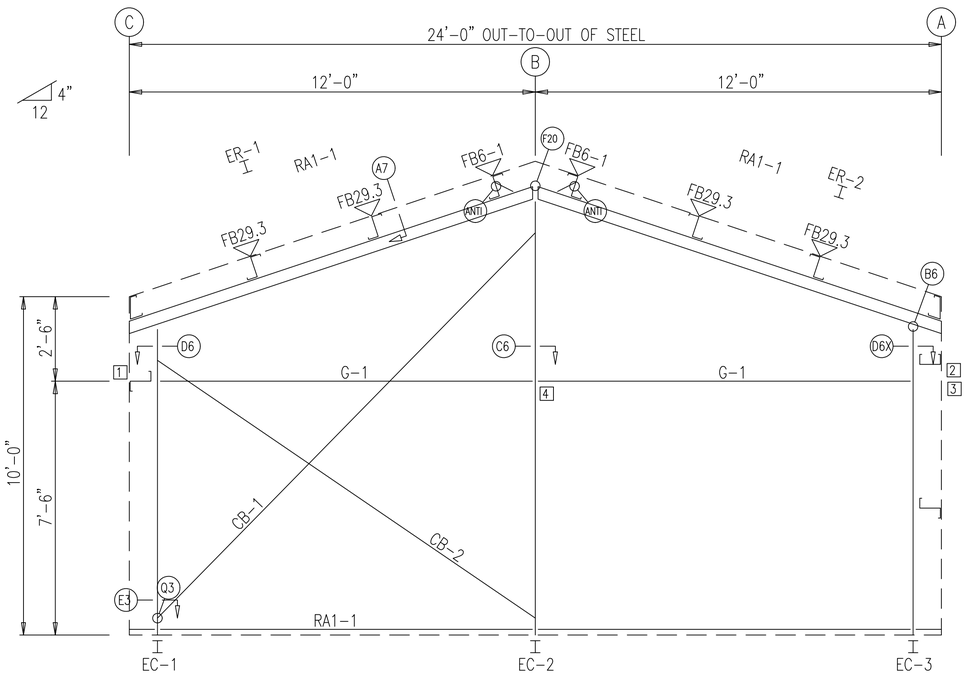

ENDWALL FRAMING: FRAME LINE 1

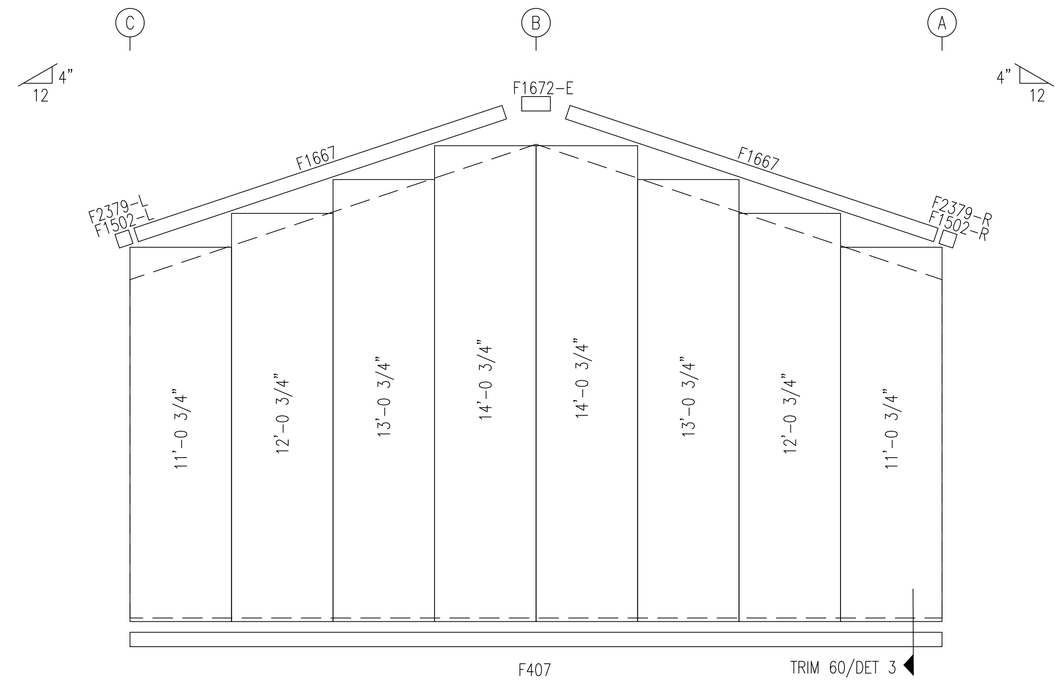

ENDWALL SHEETING & TRIM: FRAME LINE 1

PANELS: 26 Gauge PBR – Polar White

NOTE–

FIELD SLOT GIRTS FOR BRACING SEE DETAIL ZZ

GENERAL NOTES:

1. INSTALL ALL GIRTS AND FLANGE BRACES (FB) AS SHOWN.
2. WALL PANEL PROVIDES STRUCTURAL STABILITY TO THE BUILDING.
3. OTHER THAN FOR WALK DOORS AND WINDOWS SHOWN ON THE CONTRACT, DO NOT ADD ADDITIONAL WALL OPENINGS WITHOUT APPROVAL OF BUILDING MANUFACTURER OR PROFESSIONAL ENGINEER.
4. AFTER INSTALLATION, WIPE ALL PANELS CLEAN OF METAL SHAVINGS CAUSED BY DRILLING.

ISSUE	DATE	DESCRIPTION	BY	CK'D	DSN
A	3/ 5/18	FOR CONSTRUCTION PERMIT	CHB	MMH	EPR

GENERAL STEEL CORPORATION

10639 W. BRADFORD RD PHONE : 800-406-5126
LITTLETON, CO 80127-4208 FAX : 303-979-0084

PROJECT: DENNIS SHEAN
CUSTOMER: YUKI FARMS OWNER: YUKI FARMS
LOCATION: LOS GATOS, CA 95032-1920 US

CAD	DATE	SCALE	PHASE	BUILDING ID	JOB NUMBER	SHEET NUMBER	ISSUE
	3/ 5/18	N.T.S.	1	A	16-B-39553	E5	A

BEARING FRAME ONLY!

WASHER TO BE USED AT ENDWALL COLUMN TO ENDWALL RAFTER CONNECTION. USE ONE WASHER ON COLUMN SIDE. WASHER NOT NEEDED ON CLIP SIDE.

BOLT TABLE
FRAME LINE 6

LOCATION	QUAN	TYPE	DIA	LENGTH
Cor_Column/Raf	4	A325	1/2"	1 1/4"
ER-3/ER-4	8	A325	5/8"	1 3/4"
EC-5/ER-4	4	A325	5/8"	1 1/4"

MEMBER TABLE
FRAME LINE 6

MARK	PART	LENGTH
EC-4	W8X10	9'-5 15/16"
EC-5	W8X10	12'-3 7/16"
EC-6	W8X10	9'-5 15/16"
ER-3	W8X10	12'-2 1/8"
ER-4	W8X10	12'-2 1/8"
G-2	8X25Z16	10'-11 7/8"
CB-3	1/2" DIA. ROD	14'-2"
CB-4	1/2" DIA. ROD	16'-5"

FLANGE BRACE TABLE
FRAME LINE 6

▽ ID	PART	LENGTH
FB29.3	L2X2X14G	2'-5 1/4"
FB6-1	L2X2X1/8"	2'-5 1/4"

CONNECTION PLATES
FRAME LINE 6

□ ID	MARK/PART
1	SC-5
2	PC22-1
3	PC31-1
4	PC30

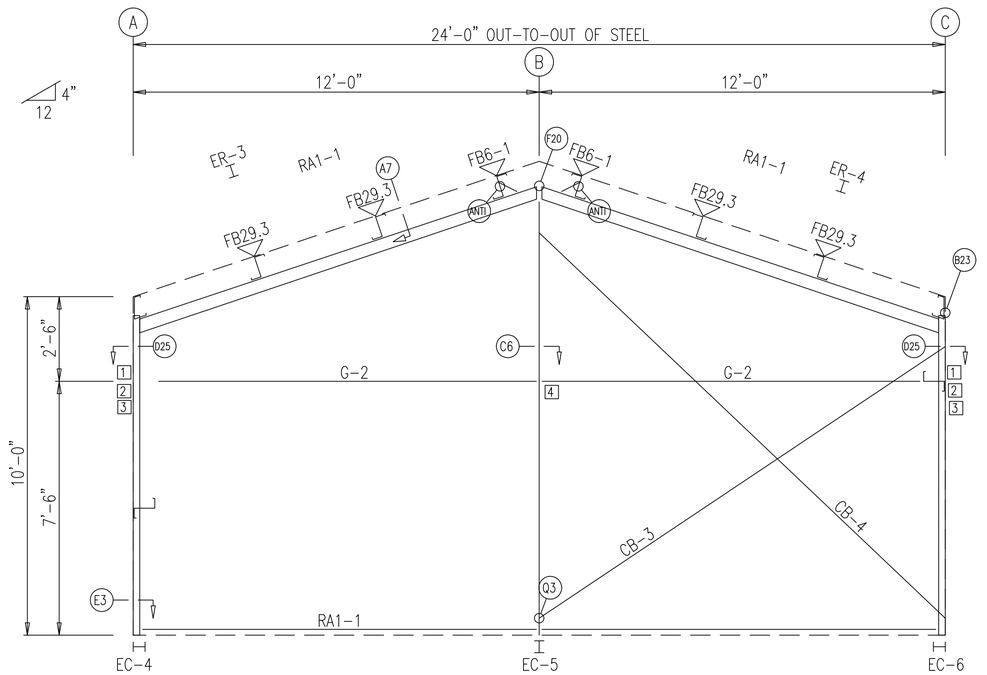

ENDWALL FRAMING: FRAME LINE 6

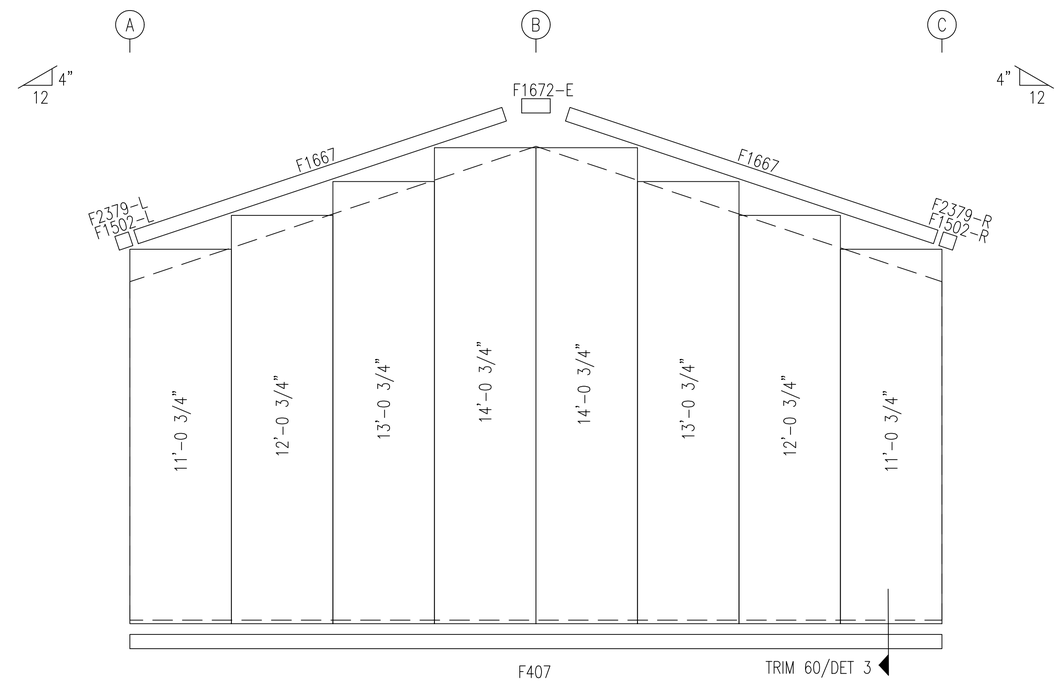

ENDWALL SHEETING & TRIM: FRAME LINE 6

PANELS: 26 Gauge PBR – Polar White

NOTE–

FIELD SLOT GIRTS FOR BRACING SEE DETAIL ZZ

GENERAL NOTES:

1. INSTALL ALL GIRTS AND FLANGE BRACES (FB) AS SHOWN.
2. WALL PANEL PROVIDES STRUCTURAL STABILITY TO THE BUILDING.
3. OTHER THAN FOR WALK DOORS AND WINDOWS SHOWN ON THE CONTRACT, DO NOT ADD ADDITIONAL WALL OPENINGS WITHOUT APPROVAL OF BUILDING MANUFACTURER OR PROFESSIONAL ENGINEER.
4. AFTER INSTALLATION, WIPE ALL PANELS CLEAN OF METAL SHAVINGS CAUSED BY DRILLING.

ISSUE	DATE	DESCRIPTION	BY	CK'D	DSN
A	3/ 5/18	FOR CONSTRUCTION PERMIT	CHB	MMH	EPR

GENERAL STEEL CORPORATION

10639 W. BRADFORD RD PHONE : 800-406-5126
LITTLETON, CO 80127-4208 FAX : 303-979-0084

PROJECT: DENNIS SHEAN

CUSTOMER: YUKI FARMS OWNER: YUKI FARMS

LOCATION: LOS GATOS, CA 95032-1920 US

CAD	DATE	SCALE	PHASE	BUILDING ID	JOB NUMBER	SHEET NUMBER	ISSUE
	3/ 5/18	N.T.S.	1	A	16-B-39553	E6	A

SPLICE PLATE & BOLT TABLE									
Mark	Qty Top	Bot	Int	Type	Dia	Length	Width	Thick	Length
SP-1	4	4	0	A325	3/4"	2 1/4"	6"	5/8"	1'-3 1/4"
SP-2	4	4	0	A325	3/4"	1 3/4"	6"	3/8"	1'-3 1/4"

STIFFENER TABLE				
Mark	Stiff Mark	Plate Size Width	Thick	Length
RF1-1	St- 1	2 1/2	1/4"	12"
RF1-3	St- 1	2 1/2	1/4"	12"

BASE PLATE TABLE			
Col Mark	Plate Size Width	Thick	Length
BP-1	6"	3/8"	9 1/2"

FLANGE BRACES: BOTH SIDES(UNLESS NOTED)
FBxxA(1): xx=length(in)
A - L2X2X14G

MEMBER TABLE					
Mark	Web Depth Start/End	Web Plate Thick	Web Plate Length	Outside Flange W x Thk x Length	Inside Flange W x Thk x Length
RF1-1	9.0/12.0	0.134	114.7	5 x 1/4" x 110.7 5 x 1/4" x 12.8	5 x 1/4" x 103.2
RF1-2	8.0/ 8.0	0.134	139.8	5 x 1/4" x 137.1	5 x 1/4" x 137.1
RF1-3	12.0/ 9.0	0.134	114.7	5 x 1/4" x 12.8 5 x 1/4" x 110.7	5 x 1/4" x 103.2

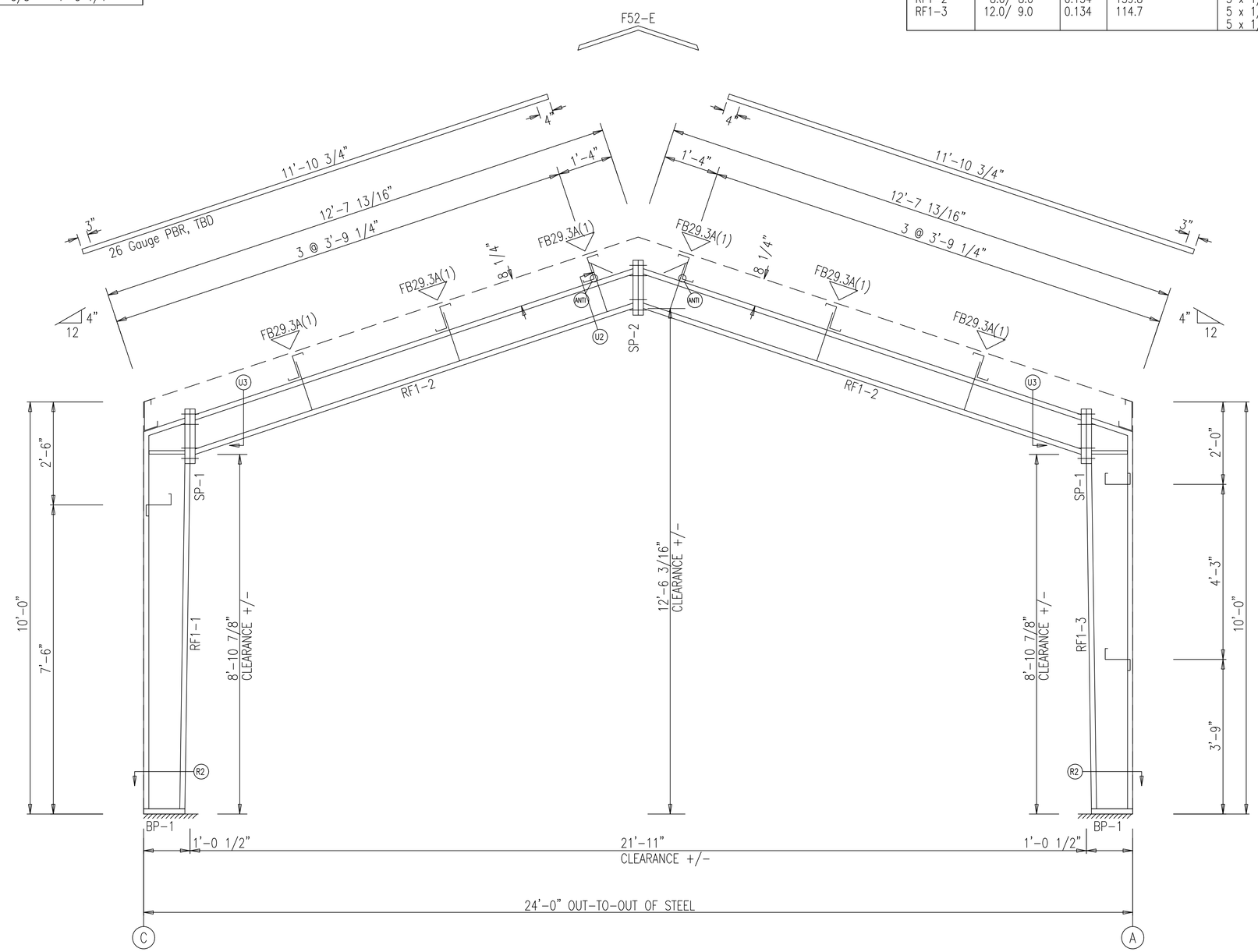

FRAME CROSS SECTION: FRAME LINE 2 3 4 5

GENERAL NOTES:

1. FULLY TIGHT - BOLT TIGHTENING - BOLTED JOINTS WITH A325 TYPE 1 BOLTS GREATER THAN 1/2" DIAMETER ARE SPECIFIED AS PRETENSIONED JOINTS IN ACCORDANCE WITH THE SPECIFICATION FOR STRUCTURAL JOINTS USING ASTM A325 OR A490 BOLTS, DECEMBER 31, 2009. PRE-TENSIONING CAN BE ACCOMPLISHED BY USING THE TURN-OF-NUT METHOD OF TIGHTENING, CALIBRATED WRENCH, TWIST OFF TYPE TENSION CONTROL BOLTS OR DIRECT TENSION INDICATOR AS ACCEPTABLE TO THE INSPECTING AGENCY AND BUILDING OFFICIAL. INSTALLATION INSPECTION REQUIREMENTS FOR PRE-TENSIONED JOINTS (SPECIFICATION FOR STRUCTURAL JOINTS SECTION 9.2) USING TURN-OF-NUT METHID IS SUGGESTED. THE CONNECTIONS ON THIS PROJECT ARE NOT SLIP CRITICAL.
2. ALL FIELD CONNECTIONS OF SECONDARY FRAMING SHALL BE BOLTED WITH A325 BOLTS.
3. INSTALL ALL FLANGE BRACES ON COLUMN AND RAFTER AS SHOWN

ISSUE	DATE	DESCRIPTION	BY	CK'D	DSN
A	3/ 5/18	FOR CONSTRUCTION PERMIT	CHB	MMH	EPR

GENERAL STEEL CORPORATION
10639 W. BRADFORD RD PHONE : 800-406-5126
LITTLETON, CO 80127-4208 FAX : 303-979-0084

PROJECT: DENNIS SHEAN
CUSTOMER: YUKI FARMS OWNER: YUKI FARMS
LOCATION: LOS GATOS, CA 95032-1920 US

CAD	DATE	SCALE	PHASE	BUILDING ID	JOB NUMBER	SHEET NUMBER	ISSUE
	3/ 5/18	N.T.S.	1	A	16-B-39553	E7	A

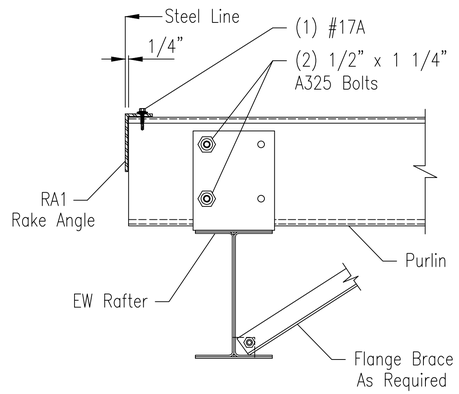

1/2" x 1 1/4" A325 Bolts
(Typ.) (U.N.)

A7 SECTION THRU HOT ROLLED RAFTER

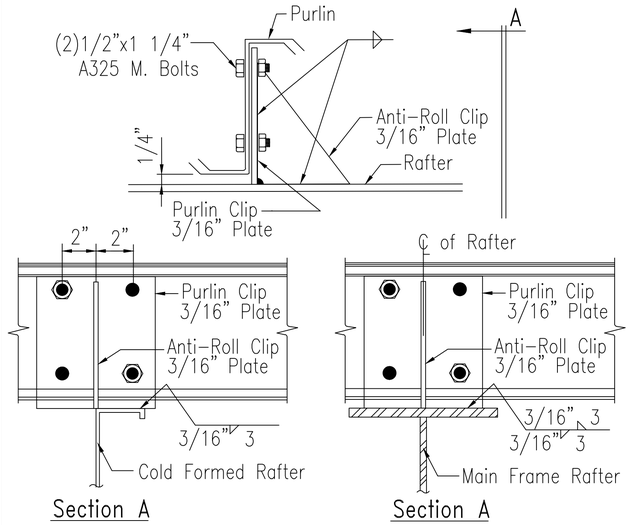

ANTI PURLIN ANTI-ROLL CLIP

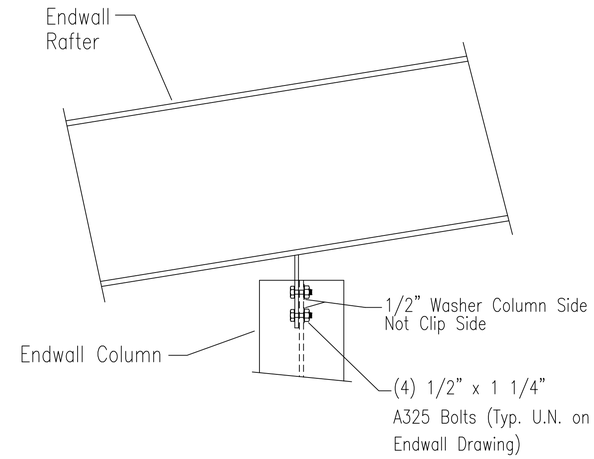

B6 HOT ROLLED ENDWALL COLUMN TO RAFTER

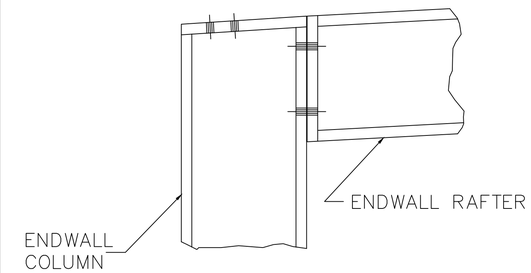

SEE ERECTION DRAWINGS FOR BOLT SIZE.

B23 CORNER COLUMN TO ENDWALL RAFTER

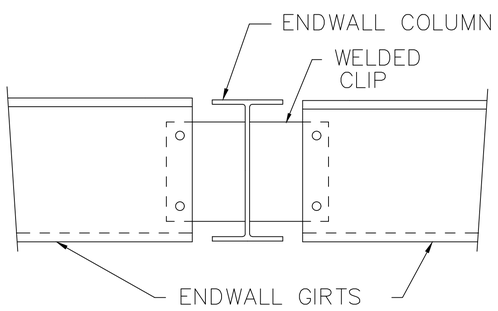

1/2"ø x 1 1/4" A325 BOLTS

C6 ENDWALL COLUMN TO WALL GIRT

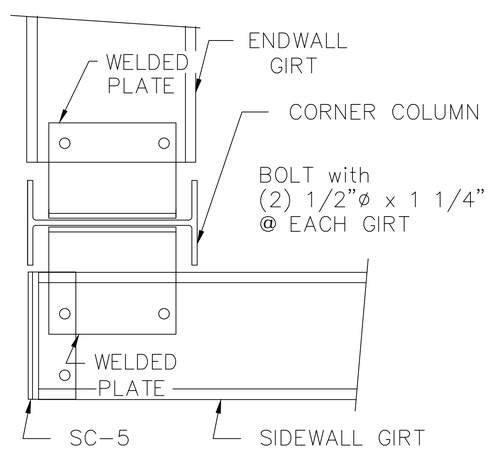

D6 CORNER COLUMN TO WALL GIRT

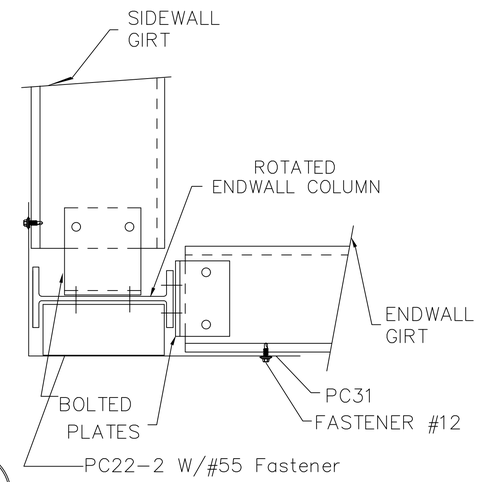

D25 CORNER COLUMN TO WALL GIRT

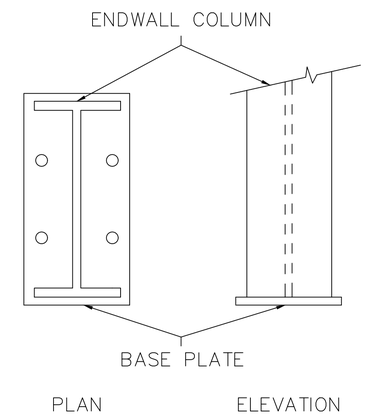

E3 BASE PLATE FOR ENDWALL COLUMN

ISSUE	DATE	DESCRIPTION	BY	CK'D	DSN
A	3/ 5/18	FOR CONSTRUCTION PERMIT	CHB	MMH	EPR

GENERAL STEEL CORPORATION
10639 W. BRADFORD RD PHONE : 800-406-5126
LITTLETON, CO 80127-4208 FAX : 303-979-0084

PROJECT: DENNIS SHEAN
CUSTOMER: YUKI FARMS OWNER: YUKI FARMS
LOCATION: LOS GATOS, CA 95032-1920 US

CAD	DATE	SCALE	PHASE	BUILDING ID	JOB NUMBER	SHEET NUMBER	ISSUE
	3/ 5/18	N.T.S.	1	A	16-B-39553	DET1	A

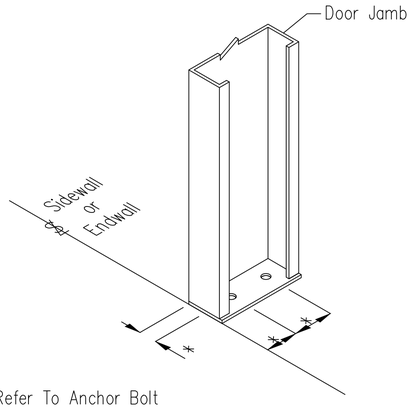

(*) = Refer To Anchor Bolt Plan

E5 BASE PLATE FOR DOOR JAMB

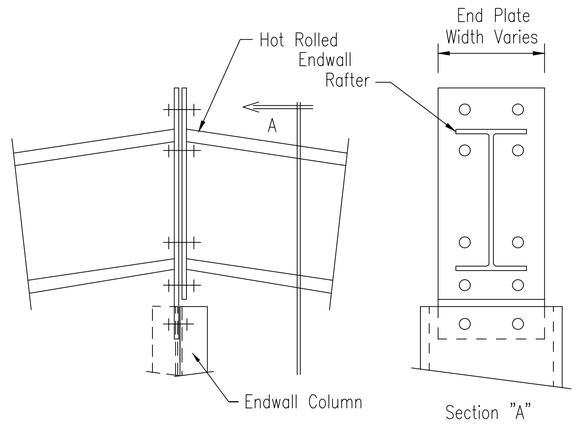

See Endwall Drawing
For Bolt Dia. And Type.

F20 RAFTER SPLICE AT SURFACE CHANGE

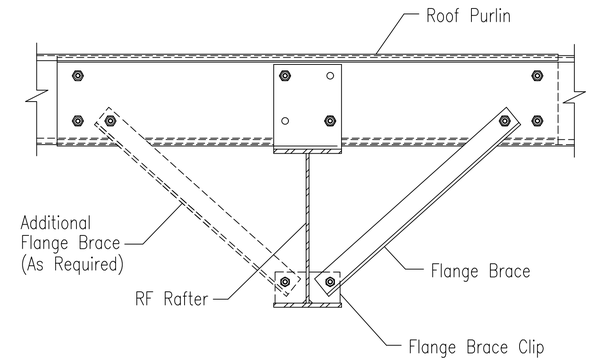

1/2" x 1 1/4" A325 Bolts
(Typ.) (U.N.)

G2 ROOF PURLIN TO INTERIOR FRAME RAFTER

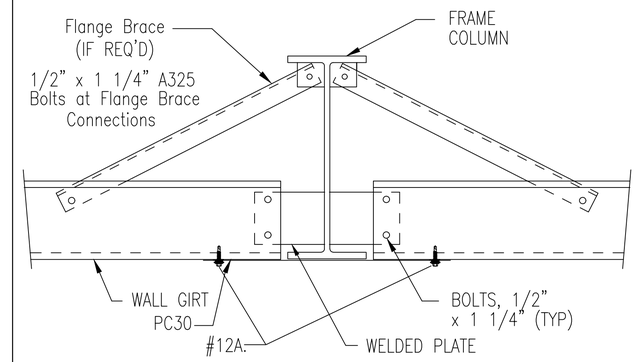

H6 WALL GIRT TO FRAME COLUMN

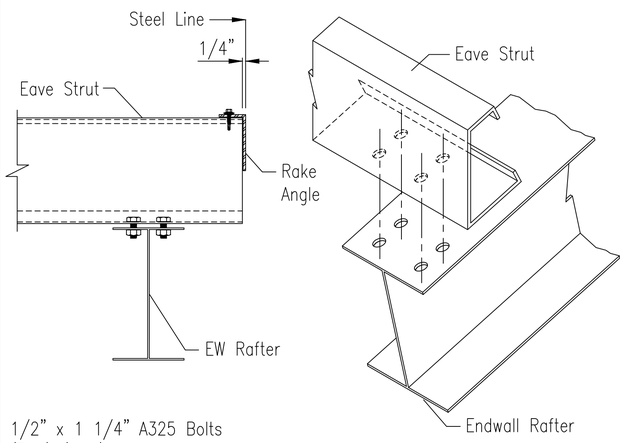

1/2" x 1 1/4" A325 Bolts
(Typ.) (U.N.)

I8 LOW SIDE EAVE STRUT TO HOT ROLLED RAFTER

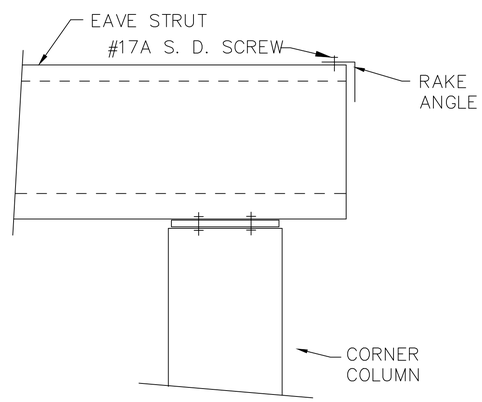

I15 EAVE STRUT TO CORNER COLUMN

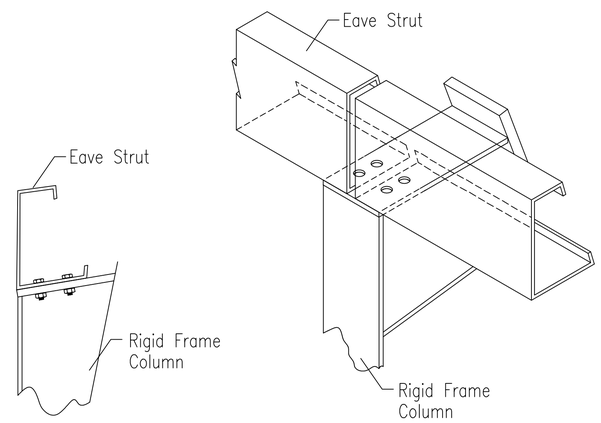

1/2" x 1 1/4" A325 Bolts
(Typ.) (U.N.)

J1 EAVE STRUT TO RIGID FRAME

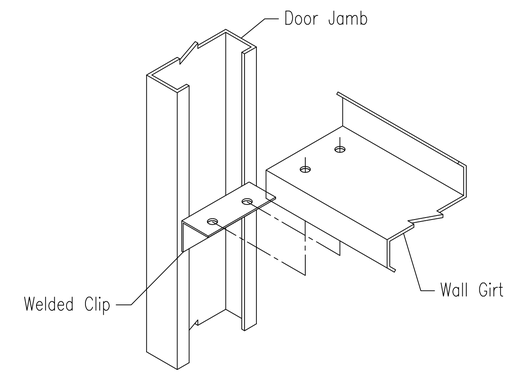

1/2" x 1 1/4" A325 Bolts
(Typ.) (U.N.)

K3 WALL GIRT TO DOOR JAMB

ISSUE	DATE	DESCRIPTION	BY	CK'D	DSN
A	3/ 5/18	FOR CONSTRUCTION PERMIT	CHB	MMH	EPR

GENERAL STEEL CORPORATION
10639 W. BRADFORD RD PHONE : 800-406-5126
LITTLETON, CO 80127-4208 FAX : 303-979-0084

PROJECT: DENNIS SHEAN
CUSTOMER: YUKI FARMS OWNER: YUKI FARMS
LOCATION: LOS GATOS, CA 95032-1920 US

CAD	DATE	SCALE	PHASE	BUILDING ID	JOB NUMBER	SHEET NUMBER	ISSUE
	3/ 5/18	N.T.S.	1	A	16-B-39553	DET2	A

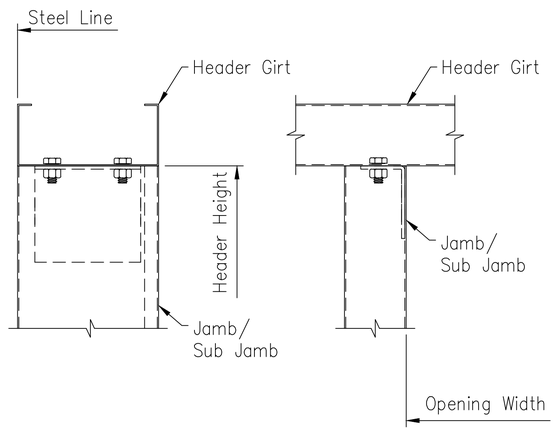

L7	Single Cold Form Jamb/ Sub Jamb To Header Girt	Date Jun '17
Page MB-L7		Rev 00

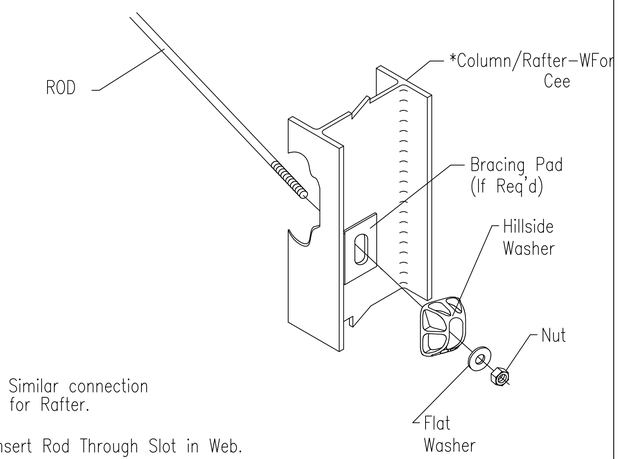

* Similar connection for Rafter.

Insert Rod Through Slot in Web.
Then Assemble Hillside Washer, Flat Washer, and Nut.

Q3 DIAGONAL ROD

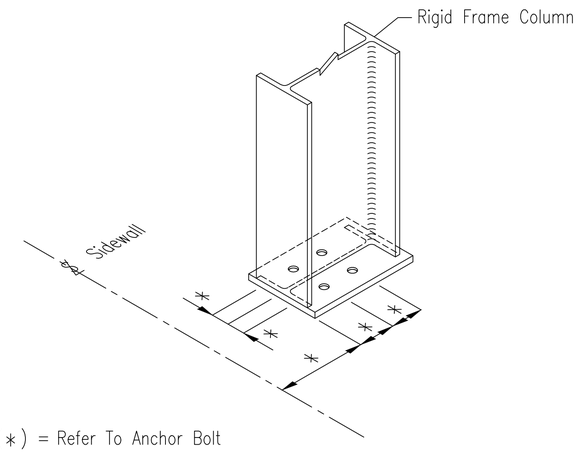

(*) = Refer To Anchor Bolt Plan

R2 ANCHOR BOLTS AT SIDEWALL COLUMNS

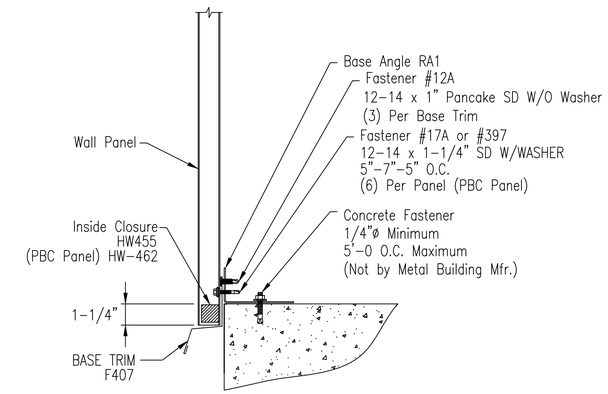

Base Angle Without Panel Recess
With Base Trim

TRIM_60

PBR Panel - Northern Standard and Northern Large Cascading Rake Trim - Sheeted Wall	Page CPR05006
	Date May '16 03

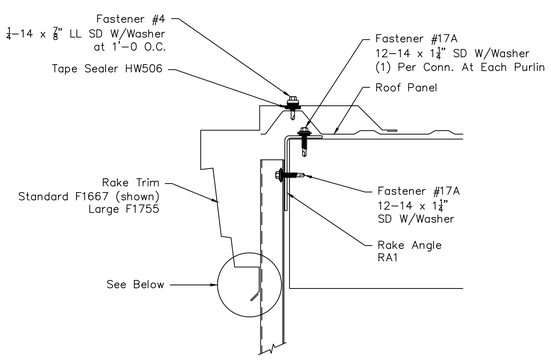

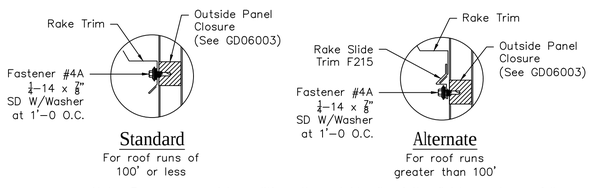

Standard
For roof runs of 100' or less

Alternate
For roof runs greater than 100'

Note: For some special conditions the outside rib of the finish panel may fall short of the rake trim. Use the rake extension trim for this condition. Field cut the rake trim and rake extension trim if required.

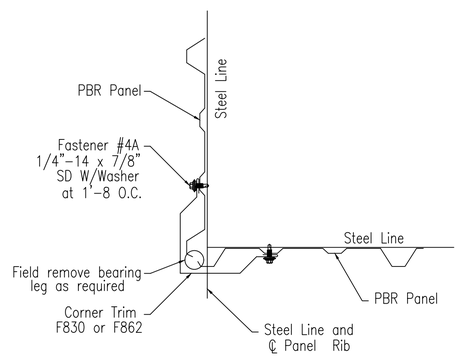

Note:
Standard panel location for Start and End panels is ℄ panel rib at steel line. Refer to erection Drawings for panel location and Corner Trim piece mark.

Outside Corner Trim – PBR Wall Panel

TRIM_186

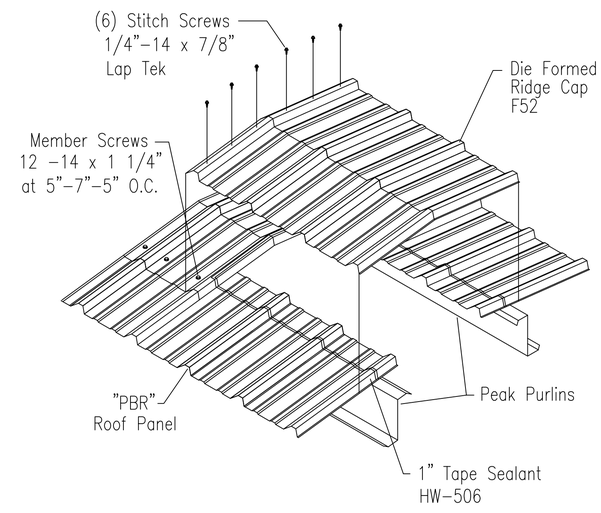

"PBR" ROOF FIXED RIDGE DETAIL
Trim_80

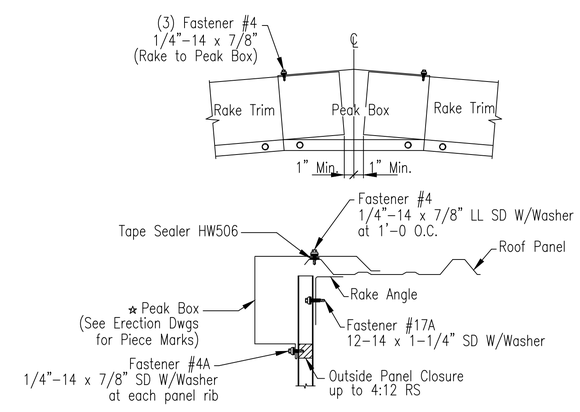

☆

Piece Mark				
Trim Profile	Std	Std Lg	Northern	Northern Lg
Cascading	F1519	F1585	F1672	F1760
Classic	F160	F4153	F381	F1024
Contoured	F2219	F2285	F2372	F2460
Signature	F916	F3853	F236	F1018

Flashing profile may vary dependent upon project order.
Attachment as illustrated are applicable for all profiles.

Peak Box Detail – PBR Roof

TRIM_547

ISSUE	DATE	DESCRIPTION	BY	CK'D	DSN
A	3/ 5/18	FOR CONSTRUCTION PERMIT	CHB	MMH	EPR

GENERAL STEEL CORPORATION
10639 W. BRADFORD RD PHONE : 800-406-5126
LITTLETON, CO 80127-4208 FAX : 303-979-0084

PROJECT: DENNIS SHEAN
CUSTOMER: YUKI FARMS OWNER: YUKI FARMS
LOCATION: LOS GATOS, CA 95032-1920 US

CAD	DATE	SCALE	PHASE	BUILDING ID	JOB NUMBER	SHEET NUMBER	ISSUE
	3/ 5/18	N.T.S.	1	A	16-B-39553	DET3	A

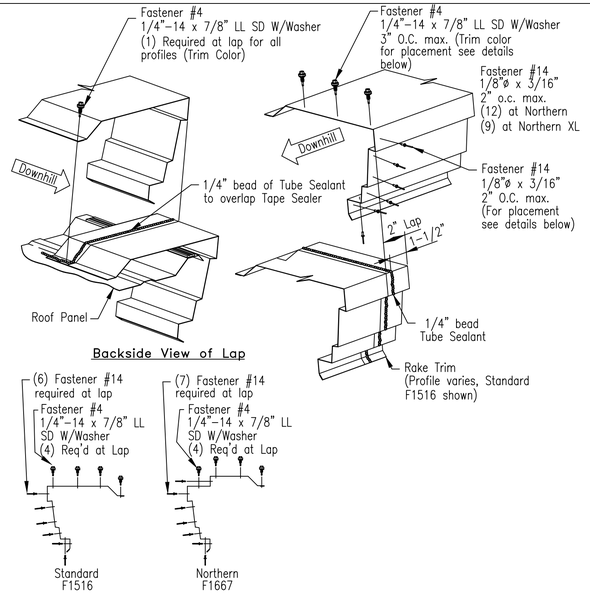

Rake End Lap Installation – PBR Roof

TRIM_548

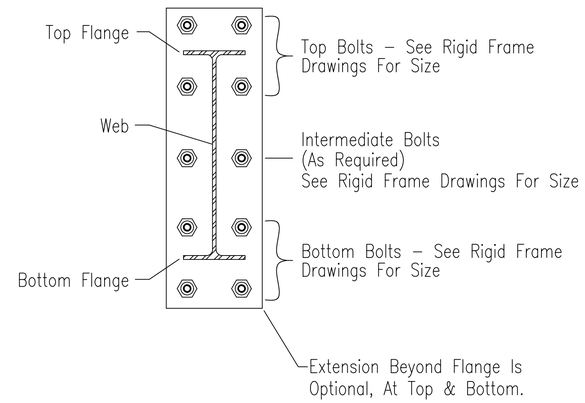

U2 BOLTS FOR RIGID FRAME RAFTER AT BUILDING PEAK

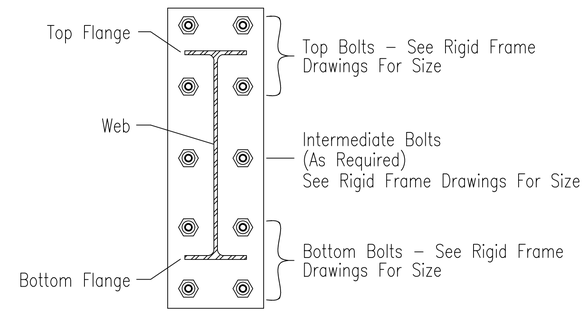

U3 BOLTS FOR RIGID FRAME RAFTER TO COLUMN CONNECTION

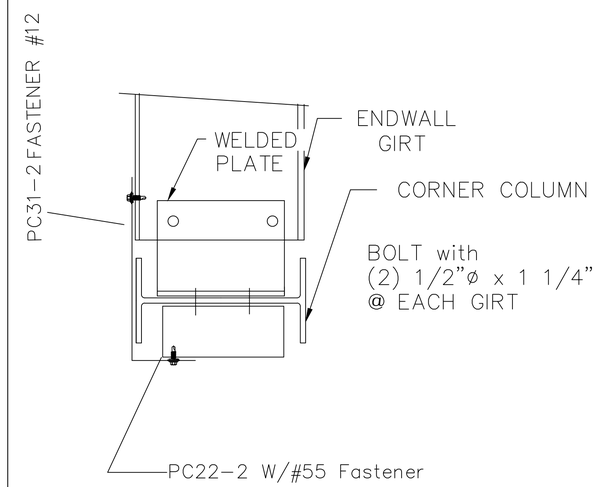

D6X CORNER COLUMN TO WALL GIRT

Die-Formed Metal Eave Closure
PBR Roof Wall Panel

Page	Rev
GPR03010	
Date Jul '17	05

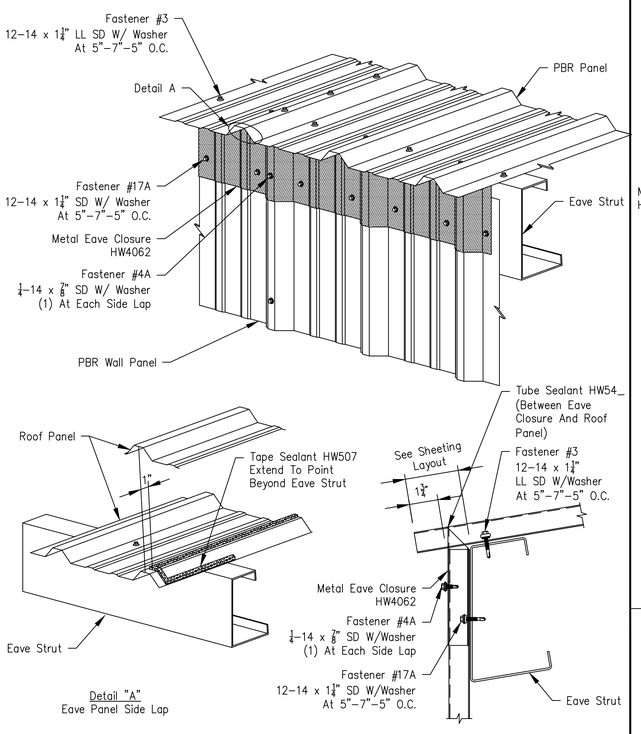

PBR Roof Panel - Northern and Northern Large
Low Eave Rake Corner with Flat Eave Trim - 1¼" Wall Panel

Page	Rev.
CPR04009-M	
Date Jun '15	02

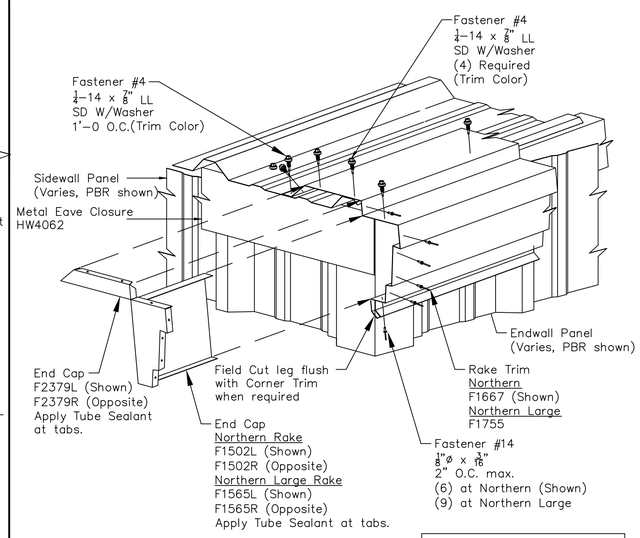

See Contruction Details for required attachment of Eave Trim and Rake Trim to Wall. Wall Panel Closures not shown for clarity.

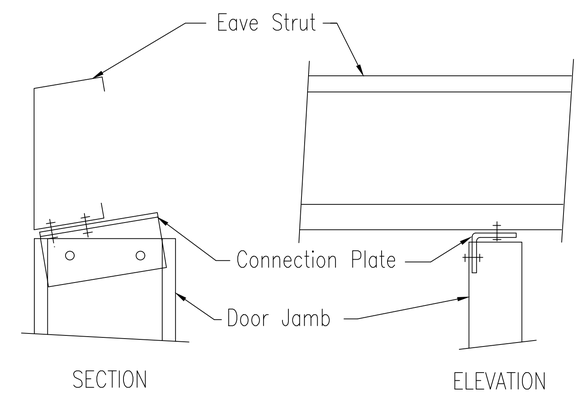

1/2" x 1 1/4" A325 Bolts (typ)

L1 DOOR JAMB TO EAVE STRUT

ISSUE	DATE	DESCRIPTION	BY	CK'D	DSN
A	3/ 5/18	FOR CONSTRUCTION PERMIT	CHB	MMH	EPR

GENERAL STEEL CORPORATION
10639 W. BRADFORD RD PHONE : 800–406–5126
LITTLETON, CO 80127–4208 FAX : 303–979–0084

PROJECT: DENNIS SHEAN
CUSTOMER: YUKI FARMS OWNER: YUKI FARMS
LOCATION: LOS GATOS, CA 95032–1920 US

CAD	DATE	SCALE	PHASE	BUILDING ID	JOB NUMBER	SHEET NUMBER	ISSUE
	3/ 5/18	N.T.S.	1	A	16–B–39553	DET4	A

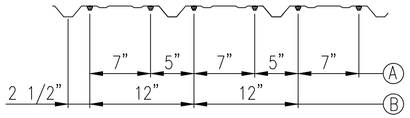

"PBR" Panel

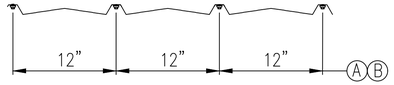

"AVP" Panel

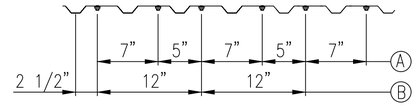

"PBU" Panel

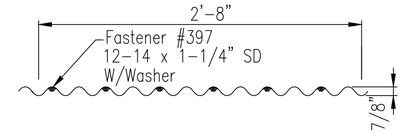

PBC Fastener Location At Panel Ends

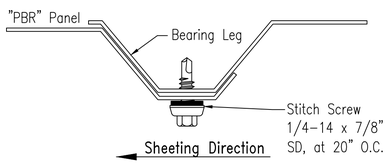

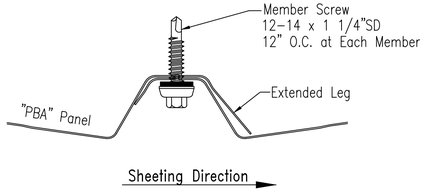

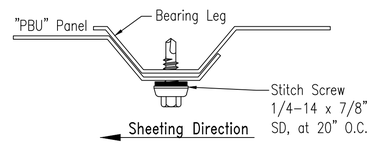

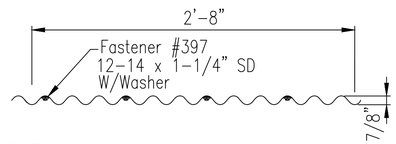

PBC Fastener Location At Intermediate Supports

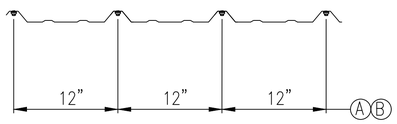

"RVPBR" Panel

Ⓐ = At Base, Rake, Eave, and Mid Span End Laps

Ⓑ = At Intermediate Member, and at Optional Liner Panel

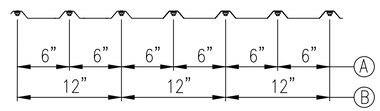

"RVPBU" Panel

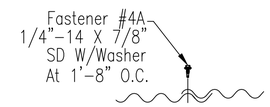

PBC Panel Sidelap

Fastener Location for Panel At Wall

TRIM_174

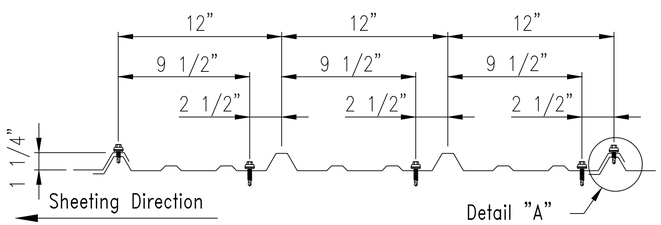

All Roof Members Except As Noted Below

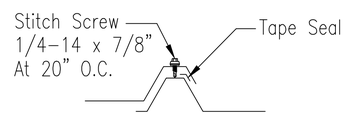

Detail "A"

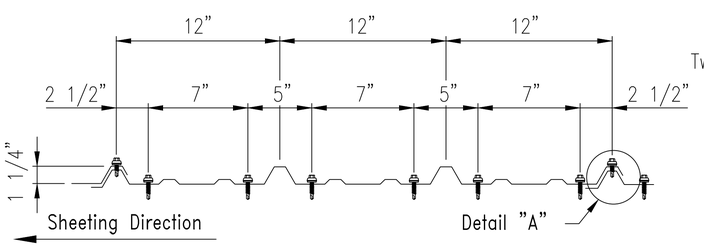

At Eave Strut, Panel End Lap, and Peak Purlin

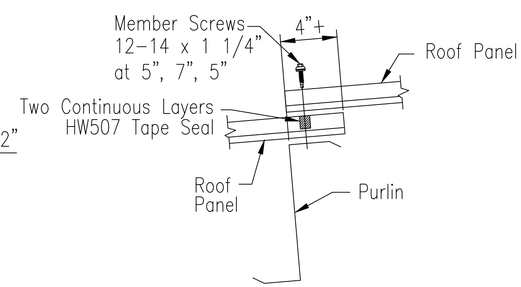

Section Thru Panel End Laps

Fastener Location for "PBR" Roof Panel

TRIM_175

Standard Grade

Description	Fastener Number	Application
1/4"-14 x 7/8"	4A	Stitch & Trim Screw
12-14 x 1 1/4"	17A	Member Screw
12-14 x 1 1/2"	17B	Member Screw
12-14 x 2"	28	Member Screw

Long Life

Description	Fastener Number	Application
1/4"-14 x 7/8"	4	Stitch & Trim Screw
12-14 x 1 1/4"	3	Member Screw
12-14 x 1 1/2"	3A	Member Screw
12-14 x 2"	58	Member Screw

Note:

Standard details call for 1 1/4" fasteners as member screws by default.

Member screws may be 1 1/4", 1 1/2", or 2" depending on insulation, application, or customer request.

Self-Drilling Screw Application

SCRW1

ISSUE	DATE	DESCRIPTION	BY	CK'D	DSN
A	3/ 5/18	FOR CONSTRUCTION PERMIT	CHB	MMH	EPR

GENERAL STEEL CORPORATION

10639 W. BRADFORD RD PHONE : 800-406-5126

LITTLETON, CO 80127-4208 FAX : 303-979-0084

PROJECT: DENNIS SHEAN

CUSTOMER: YUKI FARMS OWNER: YUKI FARMS

LOCATION: LOS GATOS, CA 95032-1920 US

CAD	DATE	SCALE	PHASE	BUILDING ID	JOB NUMBER	SHEET NUMBER	ISSUE
	3/ 5/18	N.T.S.	1	A	16-B-39553	DET5	A

PBR Wall Panel - Three Sided Framed Opening
Trim Installation with Field Notch Panel at Head Trim

Page PW07022 | Date Sep '14 | Rev. 03

Note: Trim Installation can be done by Field Notch Panel as shown on PW07022 & PW07023 OR with Field Notch and Bend Tabs at Head Trim as shown on PW07024 & PW07025.

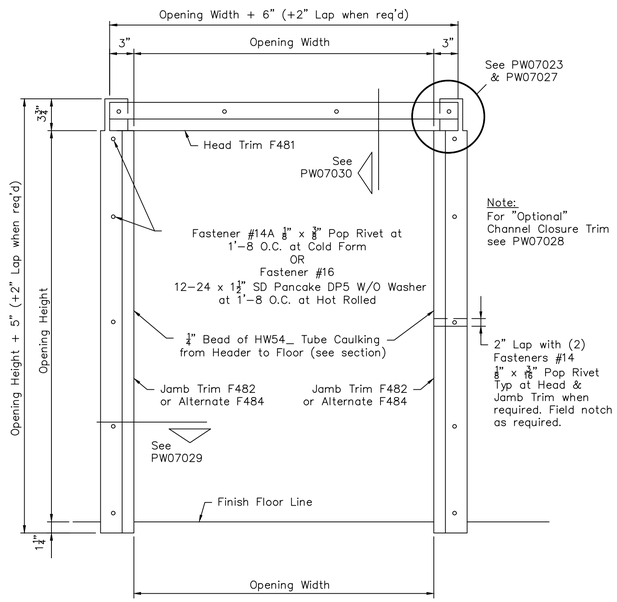

Note: All trim is to be installed BEFORE blanket insulation is applied to walls.

Note: Field measure Opening Width and Height before making field cuts and adjust cut dimensions accordingly.

Note: For "Optional" Channel Closure Trim see PW07028

PBR Wall Panel - Three Sided Framed Opening
Field Notch Panel at Head Trim

Page PW07023 | Date Sep '14 | Rev. 03

Note: Trim Installation can be done by Field Notch Panel as shown on PW07022 & PW07023 OR with Field Notch and Bend Tabs at Head Trim as shown on PW07024 & PW07025.

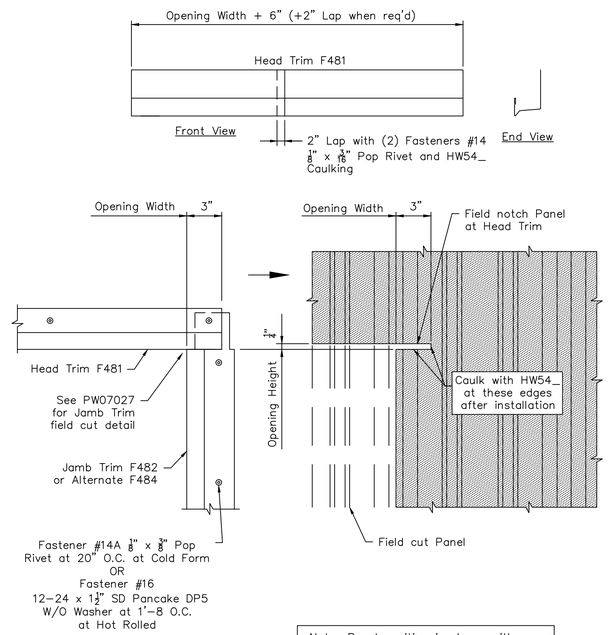

Note: All trim is to be installed BEFORE blanket insulation is applied to walls

Note: Panel position is shown with Panel Rib and Opening on 1'-0 module. Location of Rib may vary depending on the Opening Width and location. Field measure before cutting Panel and Trim.

PBR Wall Panel - Three Sided Framed Opening
Trim Installation with Field Notch and Bend Tabs at Head Trim

Page PW07024 | Date Sep '14 | Rev. 03

Note: Trim Installation can be done by Field Notch Panel as shown on PW07022 & PW07023 OR with Field Notch and Bend Tabs at Head Trim as shown on PW07024 & PW07025.

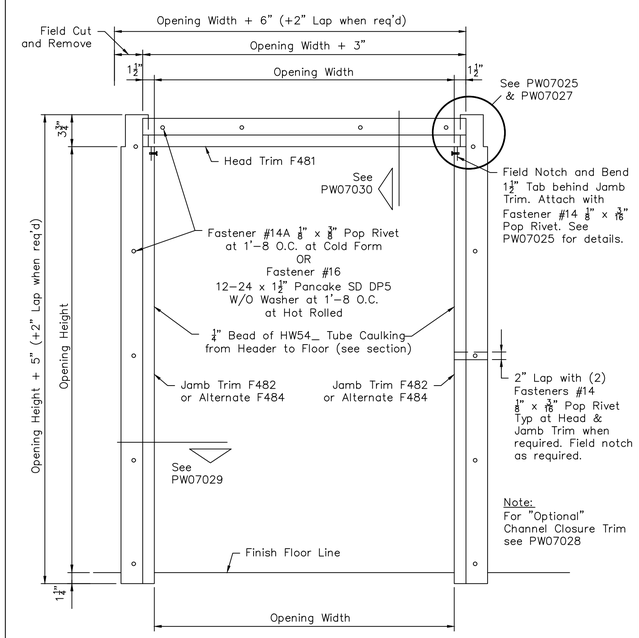

Note: All trim is to be installed BEFORE blanket insulation is applied to walls.

Note: Field measure Opening Width and Height before making field cuts and adjust cut dimensions accordingly.

Note: For "Optional" Channel Closure Trim see PW07028

PBR Wall Panel - Three Sided Framed Opening
Field Notch and Bend Tabs at Head Trim

Page PW07025 | Date Sep '14 | Rev. 03

Note: Trim Installation can be done by Field Notch Panel as shown on PW07022 & PW07023 OR with Field Notch and Bend Tabs at Head Trim as shown on PW07024 & PW07025.

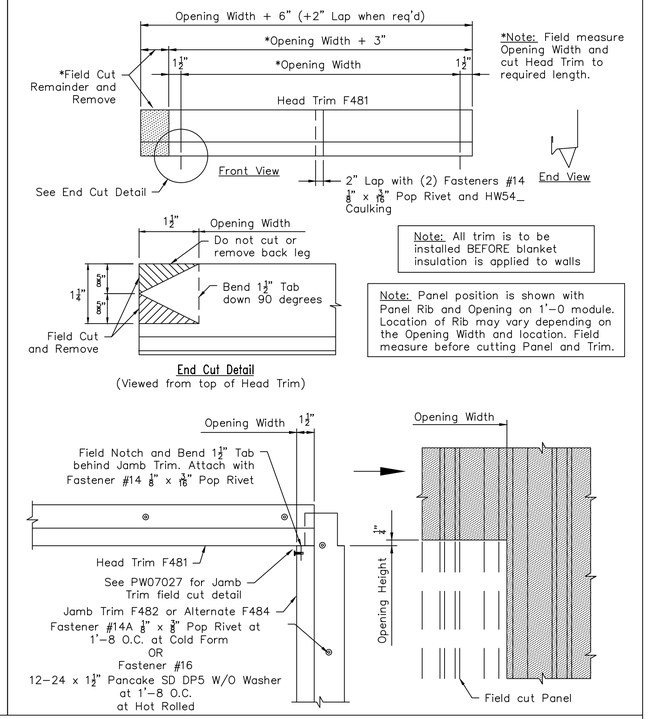

Note: All trim is to be installed BEFORE blanket insulation is applied to walls

Note: Panel position is shown with Panel Rib and Opening on 1'-0 module. Location of Rib may vary depending on the Opening Width and location. Field measure before cutting Panel and Trim.

ISSUE	DATE	DESCRIPTION	BY	CK'D	DSN
A	3/ 5/18	FOR CONSTRUCTION PERMIT	CHB	MMH	EPR

GENERAL STEEL CORPORATION
10639 W. BRADFORD RD PHONE : 800-406-5126
LITTLETON, CO 80127-4208 FAX : 303-979-0084

PROJECT: DENNIS SHEAN
CUSTOMER: YUKI FARMS
OWNER: YUKI FARMS
LOCATION: LOS GATOS, CA 95032-1920 US

CAD	DATE	SCALE	PHASE	BUILDING ID	JOB NUMBER	SHEET NUMBER	ISSUE
	3/ 5/18	N.T.S.	1	A	16-B-39553	DET6	A

PBR Wall Panel - Three Sided Framed Opening
Jamb Trim Field Cut Details

Page PW07027 | Date Nov '17 | Rev. 02

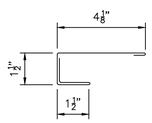

Alternate Jamb Trim F484
Top View

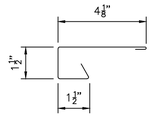

Jamb Trim F482
Top View

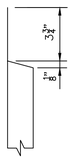

Side View at Head Trim

Side View at Floor Line

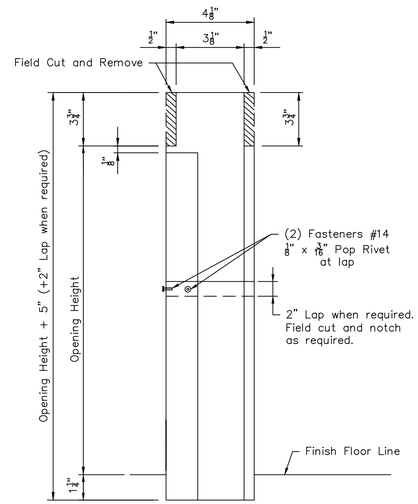

Jamb Trim F482 and
Alternate Jamb Trim F484
Front View
Right Jamb Trim as shown
Left Jamb Trim opposite hand

Note: Field measure Opening Height before making field cuts and adjust cut dimensions accordingly.

PBR Wall Panel - Three Sided Framed Opening
"Optional" Channel Closure Trim

Page PW07028 | Date Mar '15 | Rev. 03

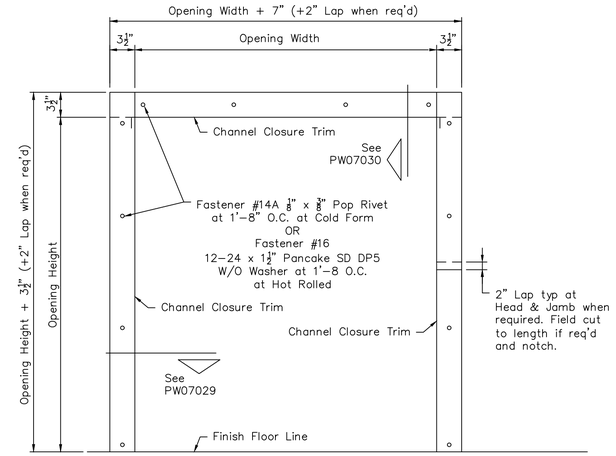

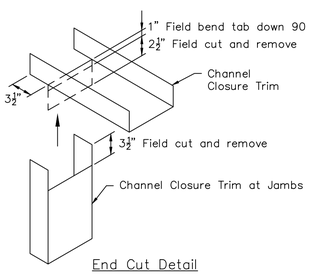

End Cut Detail

Optional
Channel Closure Trim Piece Mark

F981 – 8" Member	F2993 – 10 1/4" Member
F2994 – 8 1/4" Member	F169 – 12" Member
F982 – 10" Member	F2995 – 12 1/4" Member

Note: All trim is to be installed BEFORE blanket insulation is applied to walls.

Note: Field measure Opening Width and Height before making field cuts and adjust cut dimensions accordingly.

Note: The interior leg of the Channel Closure Trim is to be oriented (±1/8") to match the interior leg of the Header or Jamb.

PBR Wall Panel - Three Sided Framed Opening
Jamb Trim Installation

Page PW07029 | Date Nov '17 | Rev. 03

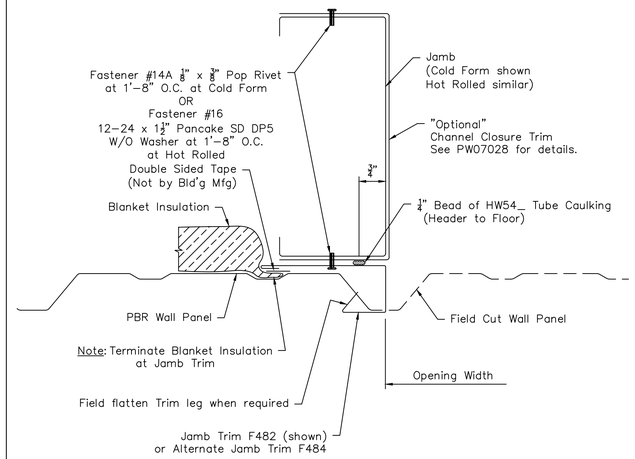

Alternate Jamb
Trim F484 Profile

Note: All trim is to be installed BEFORE blanket insulation is applied to walls.

Note: Panel position is shown with Panel Rib and Opening on 1'-0" module. Location of Rib may vary depending on the Opening Width and location. Field measure before cutting Panel and Trim.

PBR Wall Panel - Three Sided Framed Opening
Head Trim Installation

Page PW07030 | Date Oct '17 | Rev. 02

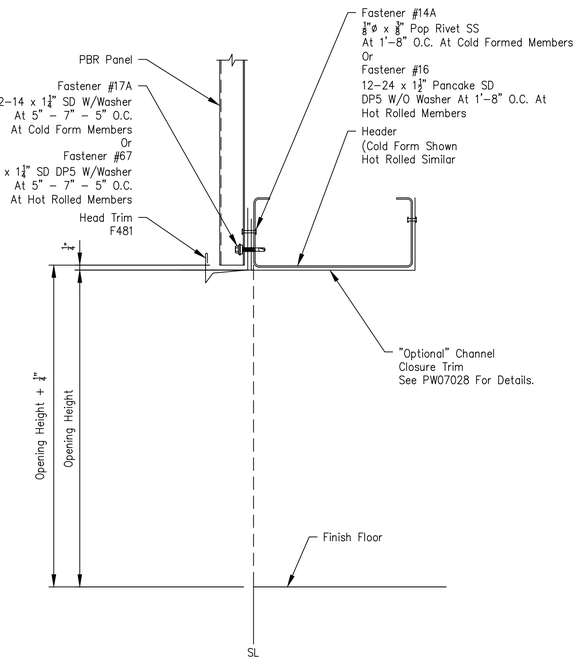

ISSUE	DATE	DESCRIPTION	BY	CK'D	DSN
A	3/ 5/18	FOR CONSTRUCTION PERMIT	CHB	MMH	EPR

GENERAL STEEL CORPORATION
10639 W. BRADFORD RD PHONE : 800-406-5126
LITTLETON, CO 80127-4208 FAX : 303-979-0084

PROJECT: DENNIS SHEAN
CUSTOMER: YUKI FARMS OWNER: YUKI FARMS
LOCATION: LOS GATOS, CA 95032-1920 US

CAD	DATE	SCALE	PHASE	BUILDING ID	JOB NUMBER	SHEET NUMBER	ISSUE
	3/ 5/18	N.T.S.	1	A	16-B-39553	DET7	A

PBR Wall Panel - Walk Door & Glass-Front Walk Door
Trim Installation with Field Notch Panel at Head Trim

Page PW09022 | Date May '14 | Rev. 01

Note: Trim Installation can be done by Field Notch Panel as shown on PW09022 & PW09023 OR with Field Notch and Bend Tabs at Head Trim as shown on PW09024 & PW09025.

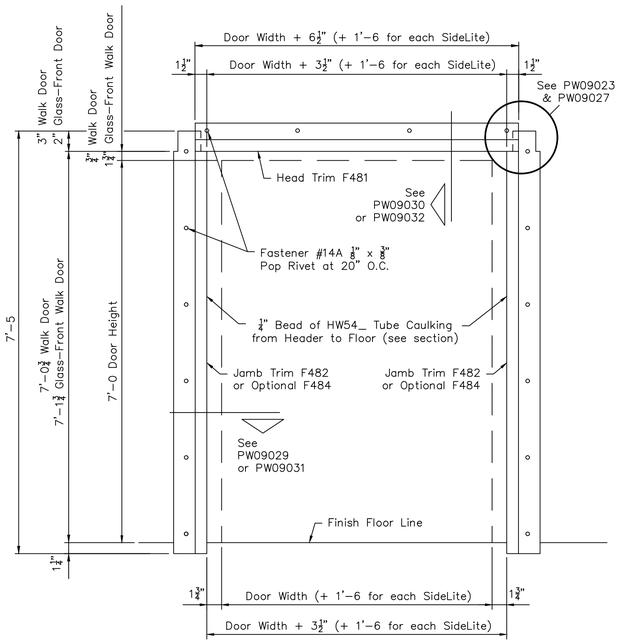

Note: All trim is to be installed BEFORE blanket insulation is applied to walls.

Note: Field measure Door Width and Height before making field cuts and adjust cut dimensions accordingly.

PBR Wall Panel - Walk Door & Glass- Front Walk Door
Field Notch Panel at Head Trim

Page PW09023 | Date Dec '11 | Rev. 00

Note: Trim Installation can be done by Field Notch Panel as shown on PW09022 & PW09023 OR with Field Notch and Bend Tabs at Head Trim as shown on PW09024 & PW09025.

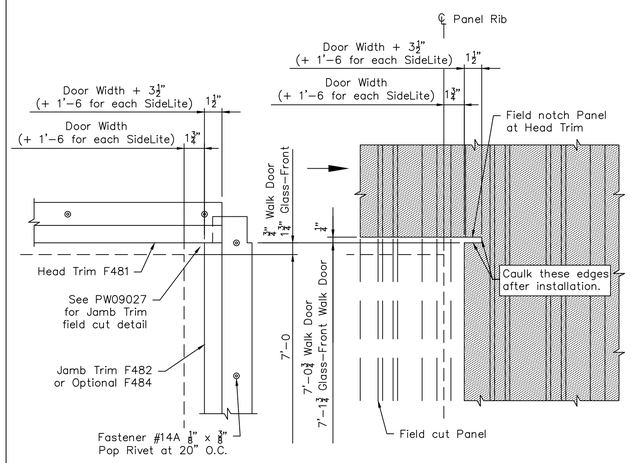

Note: All trim is to be installed BEFORE blanket insulation is applied to walls.

Note: Panel position is shown with Panel Rib and Door on 1'-0 module. Location of Rib may vary depending on the Door Width and location. Field measure before cutting Panel and Trim.

PBR Wall Panel - Walk Door & Glass-Front Walk Door
Trim Installation with Field Notch and Bend Tabs at Head Trim

Page PW09024 | Date May '14 | Rev. 01

Note: Trim Installation can be done by Field Notch Panel as shown on PW09022 & PW09023 OR with Field Notch and Bend Tabs at Head Trim as shown on PW09024 & PW09025.

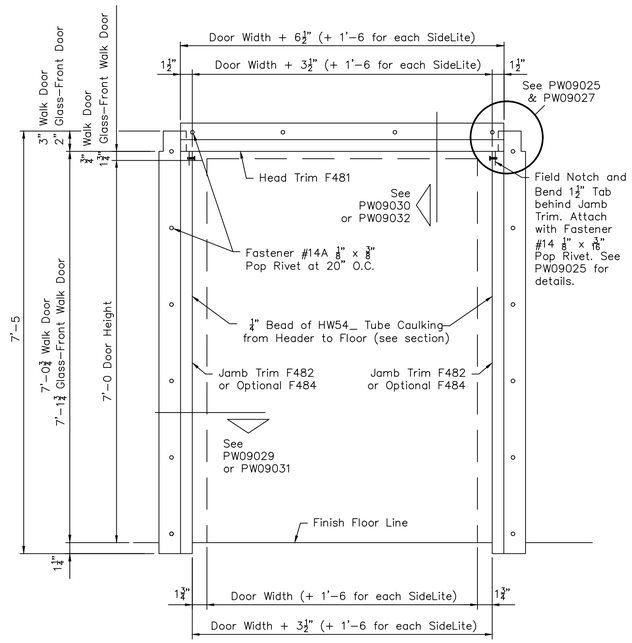

Note: All trim is to be installed BEFORE blanket insulation is applied to walls.

Note: Field measure Door Width and Height before making field cuts and adjust cut dimensions accordingly.

PBR Wall Panel - Walk Door & Glass-Front Walk Door
Field Notch and Bend Tabs at Head Trim

Page PW09025 | Date Dec '11 | Rev. 00

Note: Trim Installation can be done by Field Notch Panel as shown on PW09022 & PW09023 OR with Field Notch and Bend Tabs at Head Trim as shown on PW09024 & PW09025.

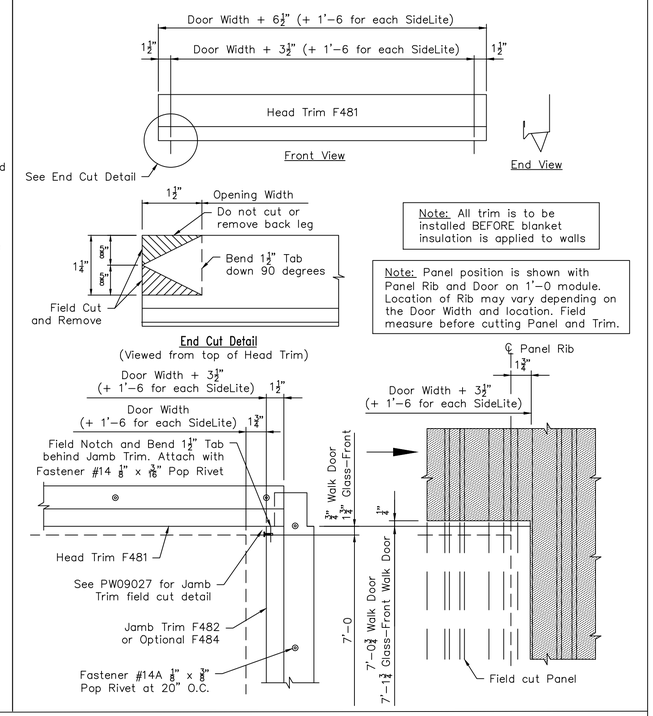

Note: All trim is to be installed BEFORE blanket insulation is applied to walls

Note: Panel position is shown with Panel Rib and Door on 1'-0 module. Location of Rib may vary depending on the Door Width and location. Field measure before cutting Panel and Trim.

ISSUE	DATE	DESCRIPTION	BY	CK'D	DSN
A	3/ 5/18	FOR CONSTRUCTION PERMIT	CHB	MMH	EPR

GENERAL STEEL CORPORATION
10639 W. BRADFORD RD PHONE : 800-406-5126
LITTLETON, CO 80127-4208 FAX : 303-979-0084

PROJECT: DENNIS SHEAN
CUSTOMER: YUKI FARMS
OWNER: YUKI FARMS
LOCATION: LOS GATOS, CA 95032-1920 US

CAD	DATE	SCALE	PHASE	BUILDING ID	JOB NUMBER	SHEET NUMBER	ISSUE
	3/ 5/18	N.T.S.	1	A	16-B-39553	DET8	A

Knock Down Walk Door With Jamb Extensions With Low Girts Attached to Door Frame

Page AC05131
Date Mar '16 Rev 02

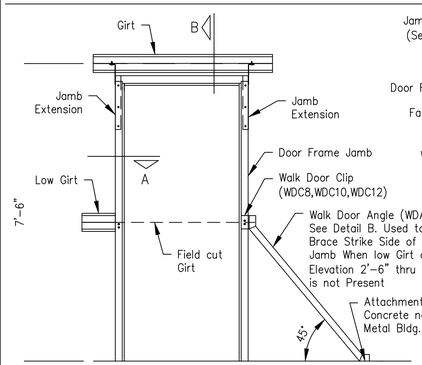

Framing Elevation

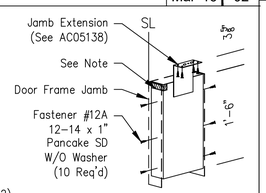

Jamb Extension Isometric

HW9582 for 8¼" Door Frames
HW9876 for 10¼" Door Frames
HW9877 for 12¼" Door Frames

Note:
If Girt has a 3½" Flange Field Notch Jamb Extension Channel to Clear Girt lip. Do not Notch Girt lip.

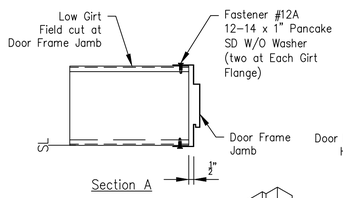

Section A

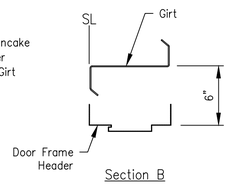

Section B

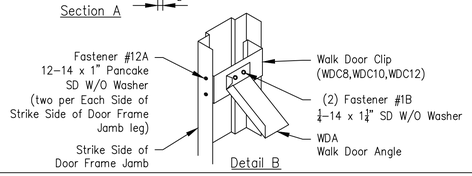

Detail B

PBR Wall Panel - Knock Down Walk Door Jamb Trim Installation

Page PW09031
Date Nov '17 Rev. 03

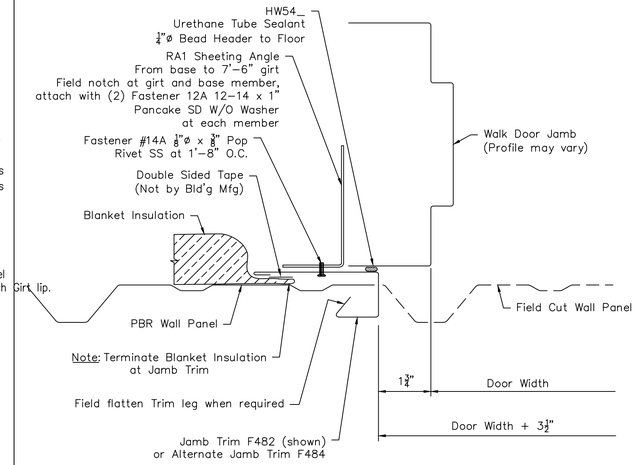

Alternate Jamb Trim F484 Profile

Note: All trim is to be installed BEFORE blanket insulation is applied to walls.

Note: Panel position is shown with Panel Rib and Door on 1'-0" module. Location of Rib may vary depending on the Door Width and location. Field measure before cutting Panel and Trim.

PBR Wall Panel - Knock Down Walk Door Head Trim Installation

Page PW09032
Date Mar '15 Rev. 02

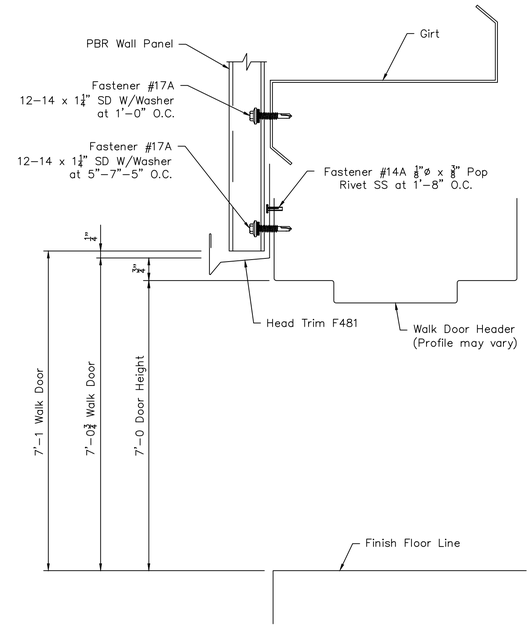

Note: All trim is to be installed BEFORE blanket insulation is applied to walls.

PBR Wall Panel - Walk Door & Glass-Front Walk Door Jamb Trim Field Cut Details

Page PW09027
Date Nov '17 Rev. 01

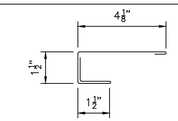

Alternate Jamb Trim F484 Top View

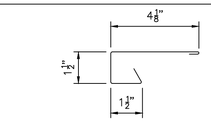

Jamb Trim F482 Top View

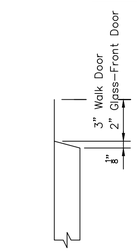

Side View at Head Trim

Side View at Floor Line

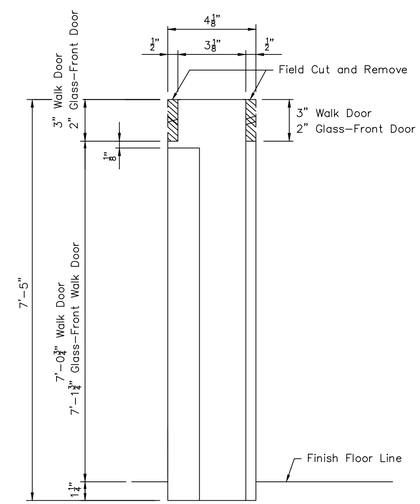

Jamb Trim F482 and Alternate Jamb Trim F484
Front View
Right Jamb Trim as shown
Left Jamb Trim opposite hand

Note: Field measure Door Height before making field cuts and adjust cut dimensions accordingly so that Jamb Trim fits to Head Trim & at 1¼" below Finish Floor Line.

STANDARD WALK DOOR (KNOCK DOWN) WITH PBR WALL PANELS

ISSUE	DATE	DESCRIPTION	BY	CK'D	DSN
A	3/ 5/18	FOR CONSTRUCTION PERMIT	CHB	MMH	EPR

GENERAL STEEL CORPORATION
10639 W. BRADFORD RD PHONE : 800-406-5126
LITTLETON, CO 80127-4208 FAX : 303-979-0084

PROJECT: DENNIS SHEAN
CUSTOMER: YUKI FARMS OWNER: YUKI FARMS
LOCATION: LOS GATOS, CA 95032-1920 US

CAD	DATE	SCALE	PHASE	BUILDING ID	JOB NUMBER	SHEET NUMBER	ISSUE
	3/ 5/18	N.T.S.	1	A	16-B-39553	DET9	A